TOP SECTION

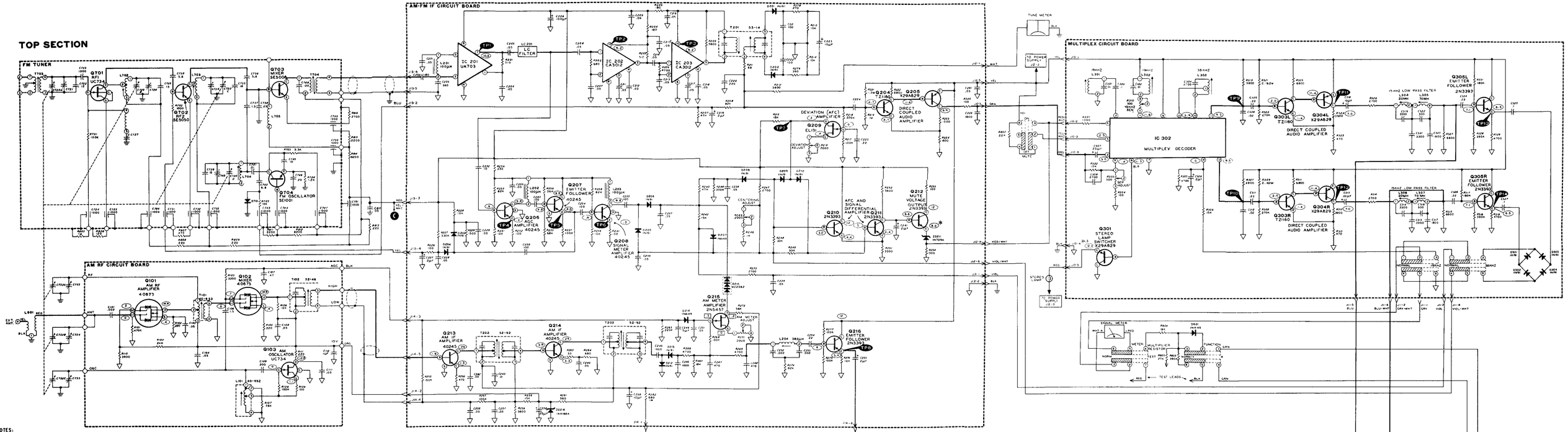

NOTES:

1. RESISTOR AND CAPACITOR NUMBERS ARE IN THE FOLLOWING GROUPS:
   - 0-99 PARTS IN THE POWER SUPPLY CIRCUIT.
   - 100-199 PARTS IN THE AM-RF CIRCUIT.
   - 200-299 PARTS IN THE AM-FM-IF CIRCUIT.
   - 300-399 PARTS IN THE MULTIPLEX CIRCUIT.
   - 400-499 PARTS IN THE INPUT PREAMPLIFIER CIRCUIT.
   - 500-599 PARTS IN THE CONTROL PREAMPLIFIER CIRCUIT.
   - 600-699 PARTS IN THE POWER AMPLIFIER CIRCUIT.
   - 700-799 PARTS IN THE FM TUNING UNIT.
   - 800-899 PARTS ON THE CHASSIS.
2. REFER TO THE CHASSIS PHOTOGRAPHS AND CIRCUIT BOARD X-RAY VIEWS FOR THE PHYSICAL LOCATION OF PARTS.
3. RESISTORS AND CAPACITORS IN THE AUDIO CIRCUITS ARE DIVIDED AS FOLLOWS:
   ODD NUMBERS ARE IN THE LEFT CHANNEL CIRCUIT.
   EVEN NUMBERS ARE IN THE RIGHT CHANNEL CIRCUIT.
4. ALL RESISTORS ARE 1/2 WATT UNLESS MARKED OTHERWISE. RESISTOR VALUES ARE IN OHMS (K=1000, M=1,000,000).
5. ALL CAPACITOR VALUES LESS THAN 1 ARE IN µF. ALL CAPACITOR VALUES 1 OR ABOVE ARE IN pF UNLESS OTHERWISE MARKED.
6. RECEIVER IS SHOWN IN THE PHONO POSITION.
7. DC VOLTAGE MEASUREMENTS WERE TAKEN WITH A HIGH IMPEDANCE INPUT VOLTMETER FROM THE POINT INDICATED TO CHASSIS GROUND. VOLTAGES MAY VARY ±20%. LINE VOLTAGE 120 VAC.
8. FM MULTIPLEX CIRCUIT VOLTAGE READINGS WERE MADE WITH THE FM PUSHBUTTON IN THE ON POSITION. AM CIRCUIT VOLTAGE READINGS WERE MADE WITH THE AM PUSHBUTTON IN THE ON POSITION.
9. ⬭ THIS SYMBOL INDICATES A POSITIVE DC VOLTAGE UNDER NO-SIGNAL CONDITIONS.
10. ▭ THIS SYMBOL INDICATES A POSITIVE DC VOLTAGE UNDER NO-SIGNAL CONDITIONS, WHICH MAY VARY WITH THE SIGNAL STRENGTH.
11. ✱ INDICATES A POSITIVE DC VOLTAGE UNDER STEREO SIGNAL CONDITIONS.
12. ▽ THIS SYMBOL INDICATES CIRCUIT BOARD GROUND.
13. ⏚ THIS SYMBOL INDICATES CHASSIS GROUND.
14. J10-3 THIS SYMBOL INDICATES A CIRCUIT BOARD PLUG GIVING PLUG AND PIN NUMBER.
15. DARK LINES INDICATE SIGNAL PATH.

SCHEMATIC OF THE HEATHKIT®
AM-FM STEREO RECEIVER
MODEL AR-29

BOTTOM SECTION

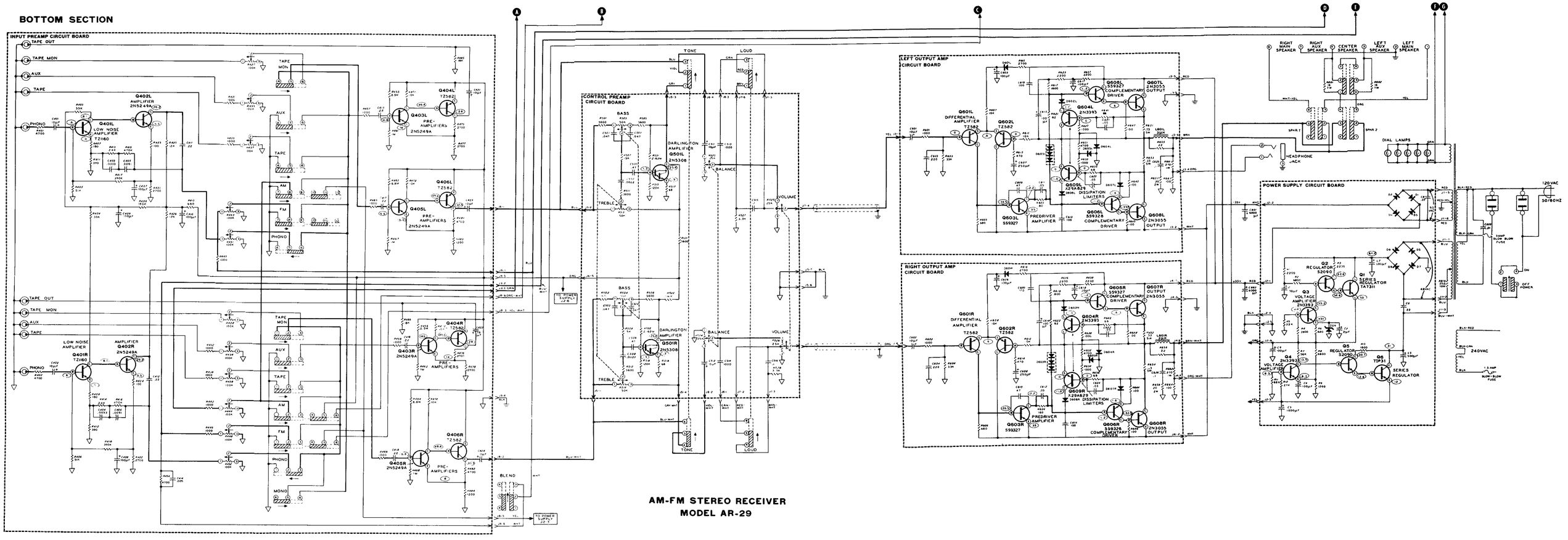

AM-FM STEREO RECEIVER
MODEL AR-29

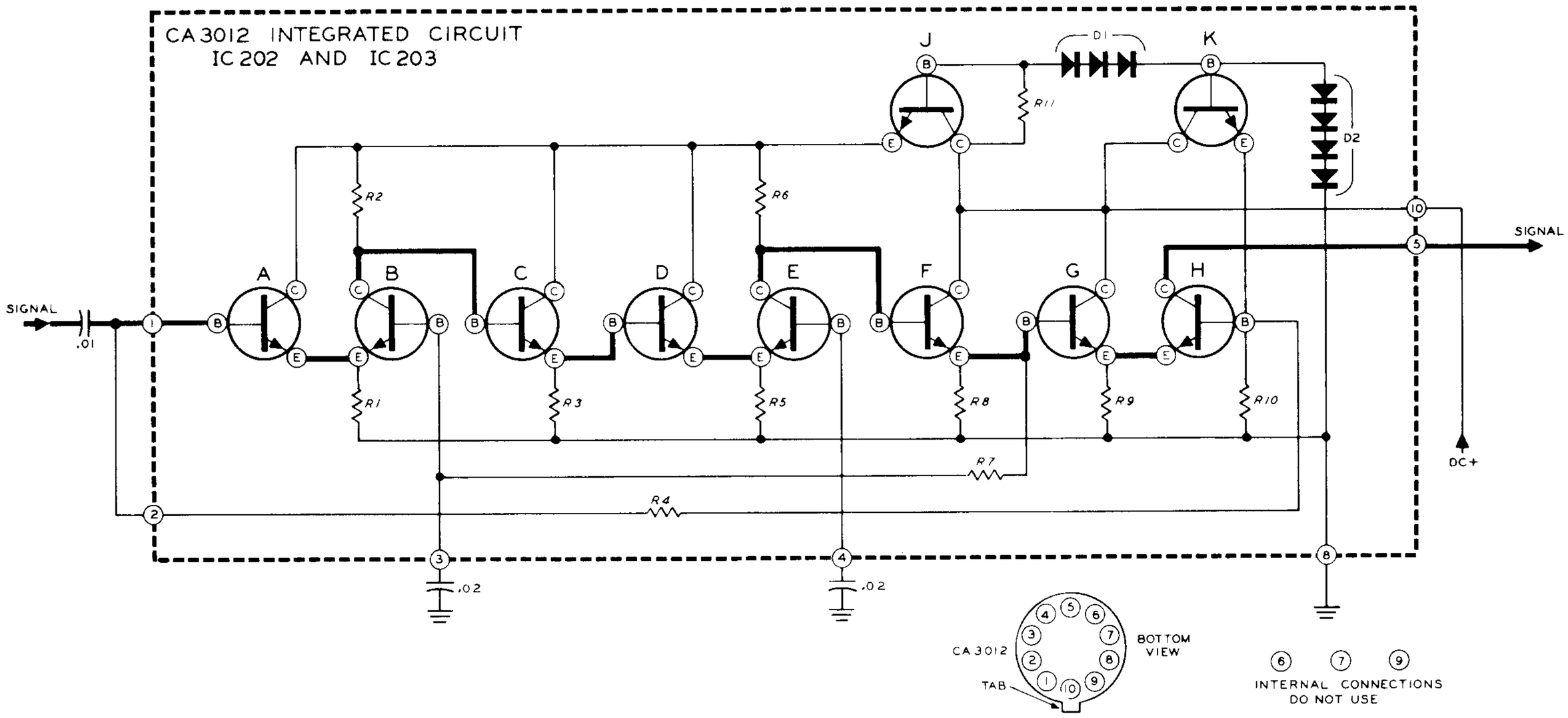

HEATH PART NUMBER	MANUFACTURER'S NUMBER	BASING
417-222 417-213 417-118 417-218 417-201 417-221	2N5308 2N5249A 2N3393 TZ1160 X29A829 TZ582	BASE COLLECTOR EMITTER
417-220 417-219	SS9327 SS9328	EMITTER BASE COLLECTOR
417-133	40245	EMITTER BASE COLLECTOR SHIELD
417-110	S2090	EMITTER BASE COLLECTOR
417-203 417-852	TA7311 TIP31	EMITTER COLLECTOR BASE
417-215	2N3055	COLLECTOR EMITTER BASE

HEATH PART NUMBER	MANUFACTURERS NUMBER	BASING
417-123	CA3012	1 3 10 5 7
417-167	UC734	SOURCE DRAIN GATE COLLECTOR
417-241	EL131	GATE SOURCE DRAIN
442-9	MC1305	1 7 14 8
417-240	40673	DRAIN GATE 2 GATE 1 SOURCE
442-20	UA703	1 5 8 4 7 3