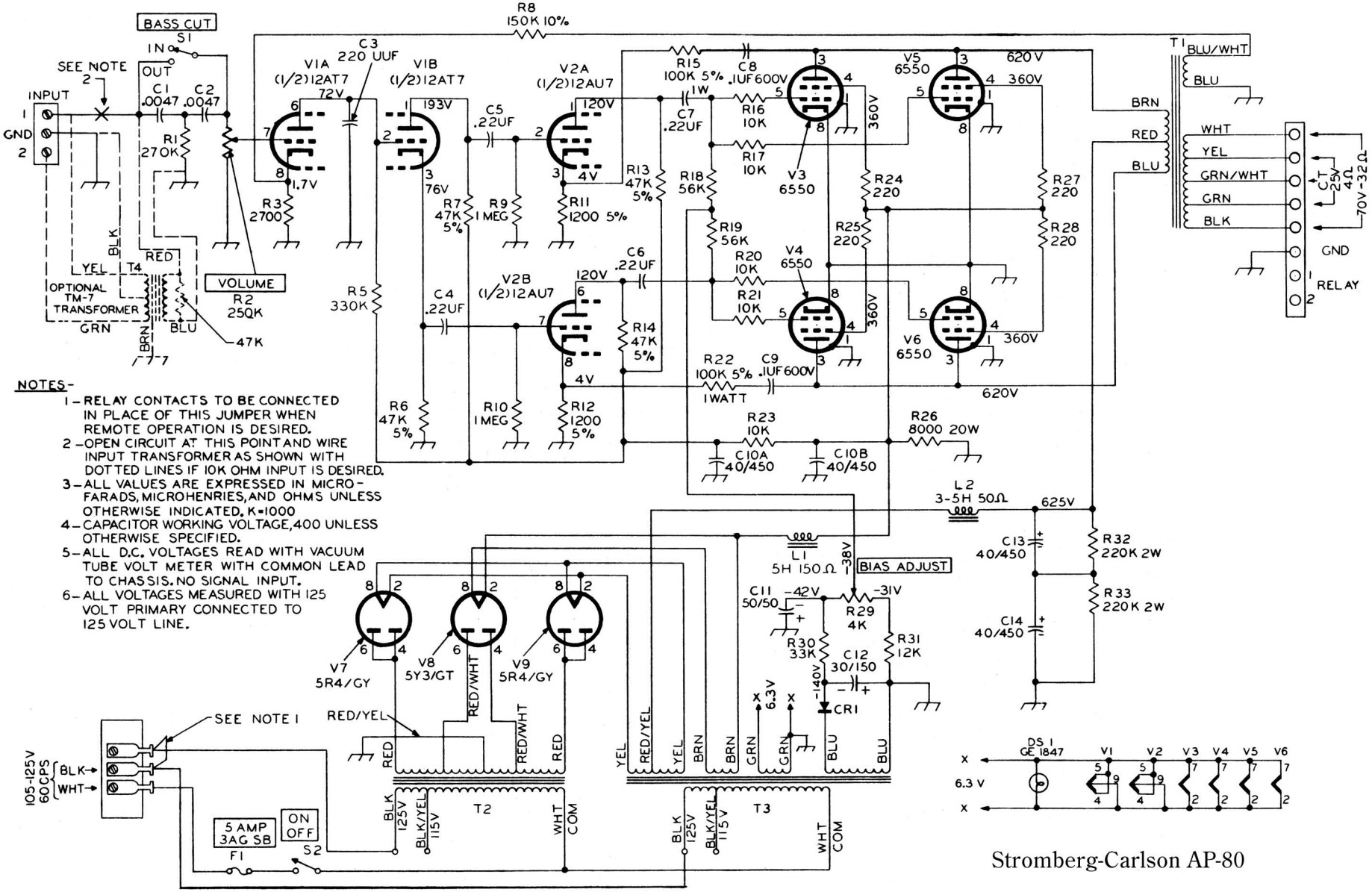

Stromberg-Carlson AP-80