PRODUCTION CHANGES IN CTC4 AND CTC4A

In some receivers, a .082 mf. capacitor (C142) was connected from the green screen control (R144-2) to ground.
In some receivers, a .082 mf. capacitor (C143) was connected from the red screen control (R145-2) to ground.
In some receivers, a .082 mf. capacitor (C144) was connected from the blue screen control (R146-2) to ground.
In some receivers, C148 across terminals 1 and 2 of R154, horizontal centering control, was 10 mf.
In some receivers, a 10 mf. capacitor (C148A) was connected across terminals of 1 and 3 of R154, horizontal centering control.
In some receivers, C166, at terminal U of PC102, was connected to ground.
In some receivers, C175, at pin 5 of V118, was .039 mf.
In some receivers, C198, in grid circuit of V122B, was .01 mf.
In some receivers, C215, in plate circuit of V124B, was .01 mf.
In some receivers, C217, in plate circuit of V125B, was .01 mf.
In some receivers, C236, in plate circuit of V125A, was .01 mf.
In some receivers, C240, at pin 7 of V124B, was 270 mmf.
In some receivers, C243, at terminal D of T114, was 39 mmf.
In some receivers, C246, at pin 9 of V124B, was 2.0 mmf.
In some receivers, C247 was 18 mmf. and was connected between the junction of R305/R255 and ground.
In some receivers, C248, was .0012 mf., and was connected from the junction of L112/R314 to L111.
In some receivers, C254, in grid circuit of V122B, was omitted.
In some receivers, C255, at pin 2 of V118, was omitted.
In some receivers, C256, at pin 1 of V111, was omitted.
In some receivers, C257, at pin 3 of V119A, was omitted.
In some receivers, C258 across terminals 2 and 3 of R154, horizontal centering control, was omitted.
In some receivers, C259, between R146-3 and +385 volt bus, was omitted.
In some receivers, a 62 microhenry coil (L111) was connected between C248 and C240 at pin 7 of V124B.
In some receivers, a 1.0 MH coil (L128) was connected from pin 9 of V124B to the junction of R283 and R256.
In some receivers, L129, at pin 1 of V125A, was 1.7 MH.
In some receivers, L143, at pin 8 of V124B, was 1.7 MH.
In some receivers, L148, at R177B-3, was omitted and R177B-3, R178B-3 and R179B-3 were connected to L120.
In some receivers, R118, at pin 2 of V107A, was 10,000 ohms.
In some receivers, R123, at pin 2 of V108A, was 10,000 ohms.
In some receivers, R144, R145 and R146 (screen controls) were 500,000 ohms.
In some receivers, R203, a 3.3 megohm resistor, was connected between R186, noise threshold control and the junction of R199, C182, R201 and R197.
In some receivers, R230, at pin 1 of V111, was omitted.
In some receivers, R231, at terminal A of T113, was 10,000 ohms.
In some receivers, R232, across terminals C and D of T113, was 2,200 ohms.
In some receivers, R234, at pins 2-9 of V110, was omitted.
In some receivers, R256, at pin 9 of V124B, was 120,000 ohms.
In some receivers, R259, in plate circuit of V125B, was 56,000 ohms.
In some receivers, R276, in lead to V126-9 (kinescope), was 470,000 ohms.
In some receivers, 56,000 ohm resistor (R281) was connected in parallel with R259 at V125B plate circuit.
In some receivers, R283, at pin 9 of V124B, was 56,000 ohms.
In some receivers, R292, at R146-1, was 56,000 ohms, 2 watts.
In some receivers, R297, at pin 7 of V124B, was 2700 ohms, 2 watts.
In some receivers, R306, in lead to V126-9 (kinescope), was 470,000 ohms.
In some receivers, a 470 ohm resistor (R312) was connected between pin 6 of V116 and −20 volt bus.
In some receivers, R314, at pin 13 of kinescope, V126, was 470 ohms and was connected between the junction L112/C248 and the −285 volt bus.
In some receivers, a 180 ohm resistor (R315) was connected between the junction of C240/L111 and ground.
In some receivers, R319, at T104 input, was omitted.
In some receivers, R320 and R321, between terminal C of PC102 and −285 volt bus, were omitted.
In some receivers, R322, in grid circuit of V122B, was omitted.
In some receivers, R323, at terminal A of T113, was omitted.
In some receivers, R325, at pin 3 of V119A, was omitted and V119A-3 was connected to −285 Volts.
In some receivers, R326, at R179B, vertical amplitude control, was omitted.
In some receivers, R237, at R177B-3, was omitted.
In some receivers, terminal U1 of T109 was −70 volts.
In some receivers, V111-4 was connected to Y1 instead of Y.
In some receivers, V115 was a 6BL4.
In some receivers, V121B-2 was connected to terminal A of T113.
In some receivers, V125A pins 4 and 5 were connected to Y instead of Y1.
In some receivers, the blu/yel lead of T117 was not connected to +380 volts and the blu lead of T117 was grounded.
In some receivers, the convergence circuit was connected as shown in the small circuit shown at the upper right hand corner of the schematic diagram.

Circuit Diagram for Chassis Numbers CTC4, CTC4A

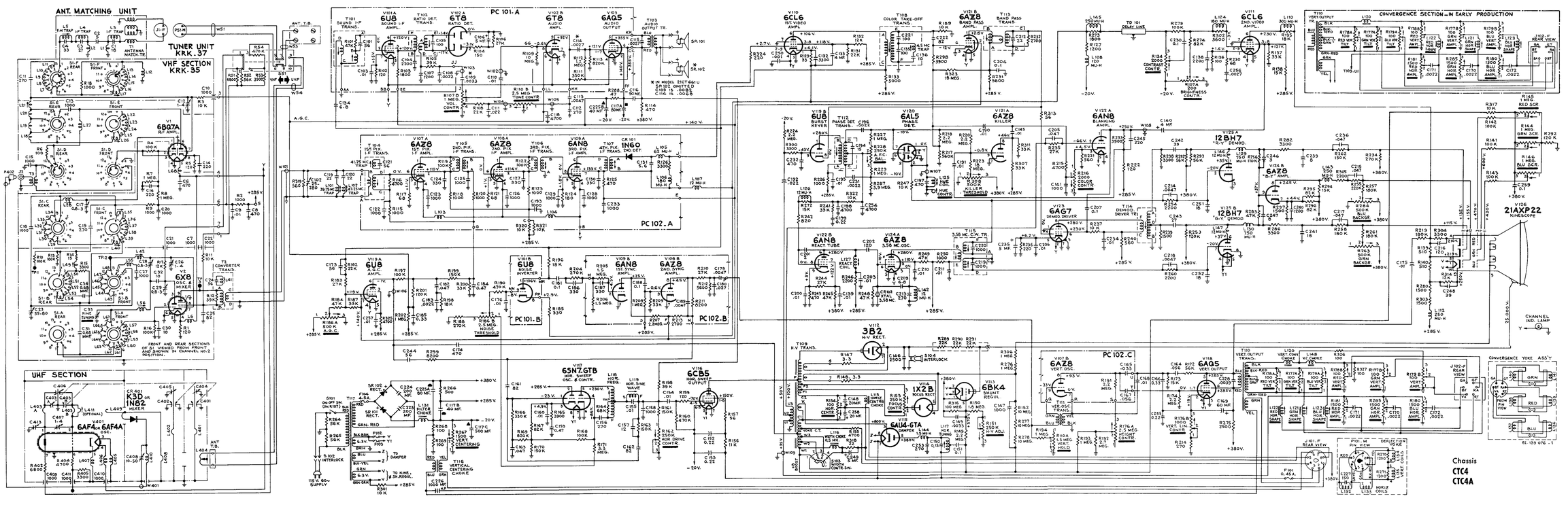
ANT. MATCHING UNIT
TUNER UNIT KRK.37
VHF SECTION KRK.35
PC 101.A
PC 102.A
PC 101.B
PC 102.B
PC 102.C
UHF SECTION
CONVERGENCE SECTION—IN EARLY PRODUCTION
V1 6BQ7A RF AMP.
V101A 6U8 SOUND I-F TRANS.
V102 6T8 RATIO DET. TRANS.
V103 6AQ5 AUDIO OUTPUT
V110 6CL6 1ST VIDEO AMP.
V111 6CL6 2ND VIDEO AMP.
V112B 6AZ8 BAND PASS AMP.
V113 6AZ8 BAND PASS TRANS.
V108 COLOR TAKE-OFF TRANS.
V107A 6Z8 1ST PIX. I-F TRANS.
V105 2ND. PIX. I-F TRANS.
V106 3RD. PIX. I-F TRANS.
V109A 6AN8 1ST. SYNC AMP.
V109B 6AN8 SYNC SEP.
V108B 6AZ8 2ND. SYNC AMP.
V119A 6U8 A.G.C. AMPL.
V119B 6U8 NOISE INVERTER
V120 6AL5 PHASE DET.
V121A 6AZ8 KILLER
V121B 6AZ8 PHASE DET. TRANS.
V122A 6AN8 BLANKING AMPL.
V123 6AN8 REACT TUBE
V124A 6AZ8 3.58 MC. OSC.
V124B 6AZ8 DEMOD. DRIVER
V125A 12BH7 "Y" DEMOD.
V125B 12BH7 "B-Y" AMPL.
V126 21AXP22 KINESCOPE
V115 6AF4-6AF4A OSC.
V116 6AQ5 VERT. OUTPUT
V117 6SN7GTB HOR. SWEEP OSC. & CONTR.
V118 6CB5 HOR. SWEEP OUTPUT
V119B 6AZ8 VERT. OSC.
V120 VERT. OUTPUT TRANS.
V121 VERT. OUTPUT TRANS.
V122 VERT. AMPL.
V123 VERT. AMPL.
V124 VERT. AMPL.
V125 VERT. AMPL.
V126 VERT. AMPL.
V127 VERT. AMPL.
V128 VERT. AMPL.
V129 VERT. AMPL.
V130 VERT. AMPL.
V131 VERT. AMPL.
V132 VERT. AMPL.
V133 VERT. AMPL.
V134 VERT. AMPL.