CIRCUIT BOARD X-RAY VIEWS

NOTE: To identify a part shown in one of these Views, so you can order a replacement, proceed as follows:

1. Note the identification number of the part (R-number, C-number, etc.).
2. Locate the same identification number (next to the part) on the Schematic. The "Description" of the part (for example – 22 kΩ, .05 μF, or 2N2712) will also appear near the part.
3. Lock up the Description in the Parts List.

POWER SUPPLY CIRCUIT BOARD

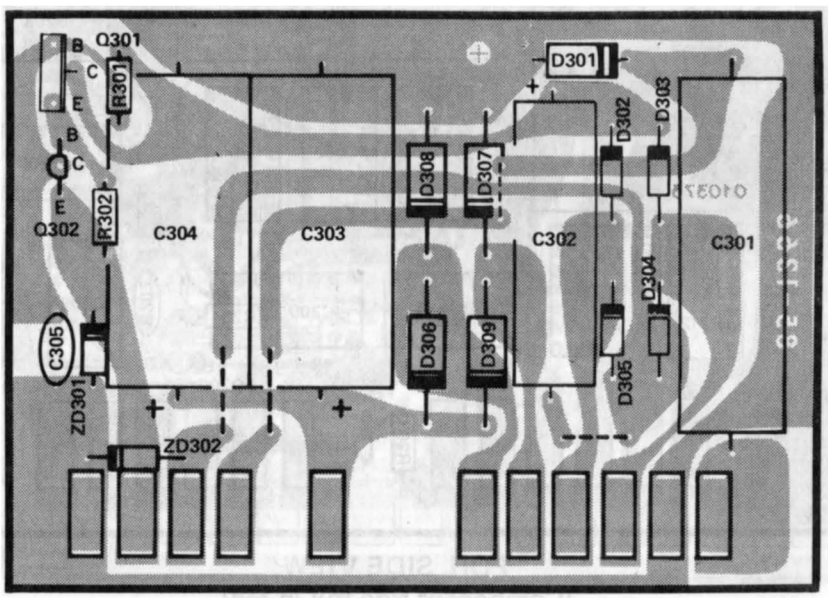

(COMPONENT SIDE VIEW)

TIME BASE CIRCUIT BOARD

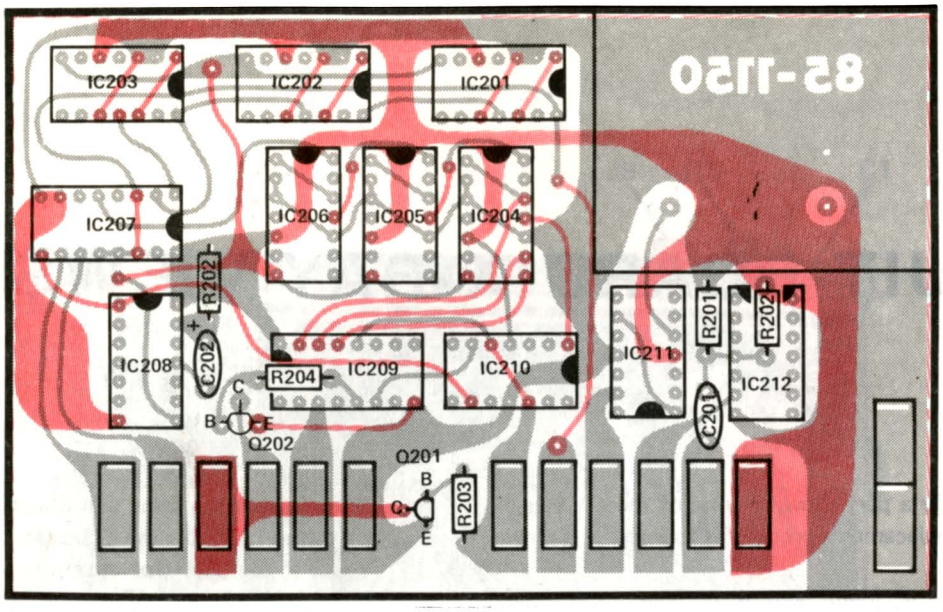

COMPONENT SIDE VIEW
(Component side foil in red)

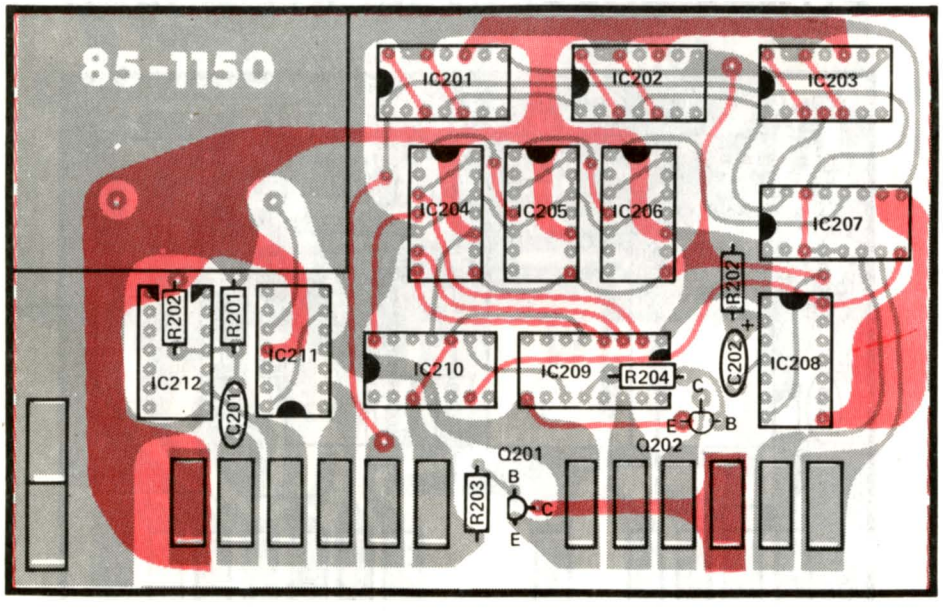

FOIL SIDE VIEW
(Component side foil in red)

INPUT CIRCUIT BOARD

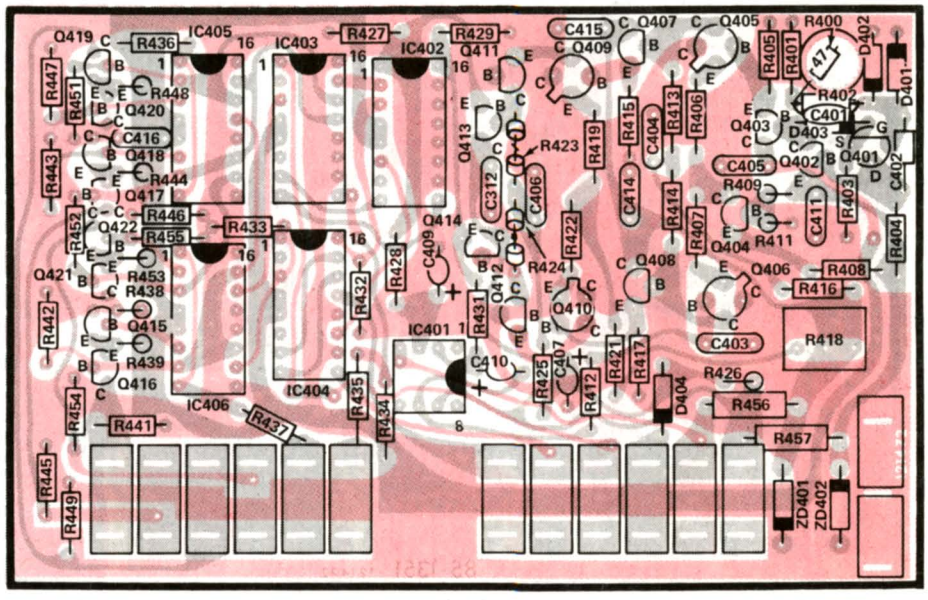

COMPONENT SIDE VIEW
(Component side foil in red)

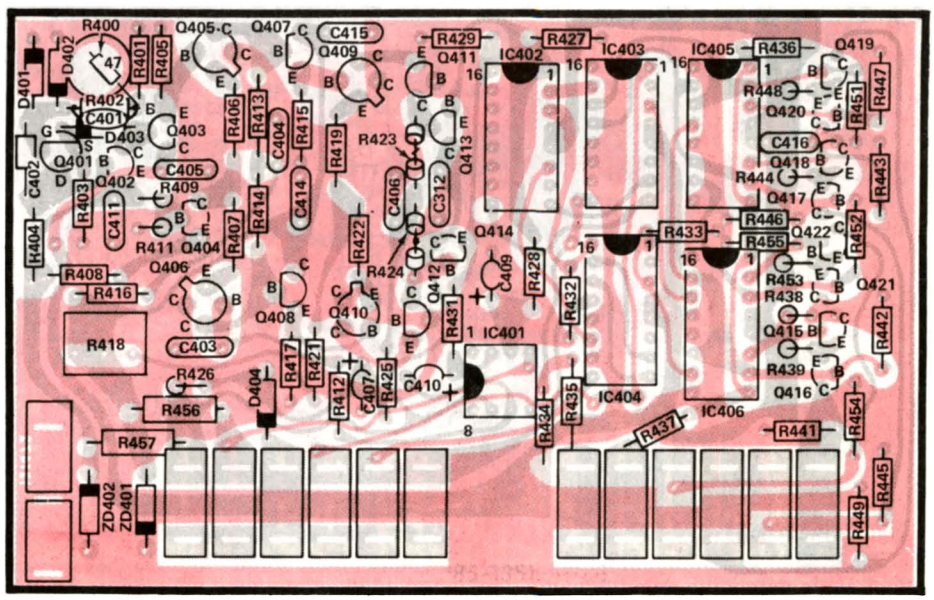

FOIL SIDE VIEW
(Component side foil in red)

FREQUENCY MULTIPLIER CIRCUIT BOARD

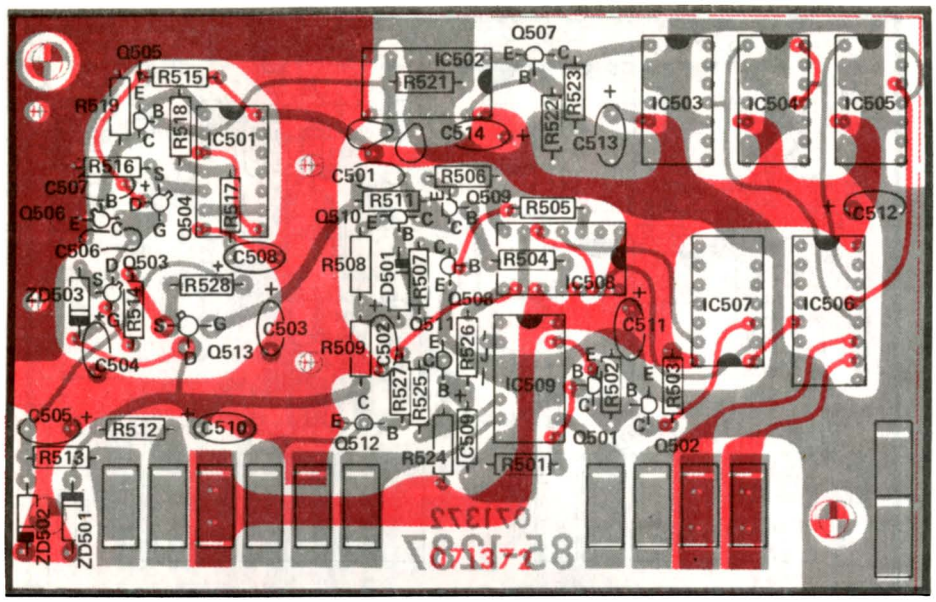

COMPONENT SIDE VIEW
(Component side foil in red)

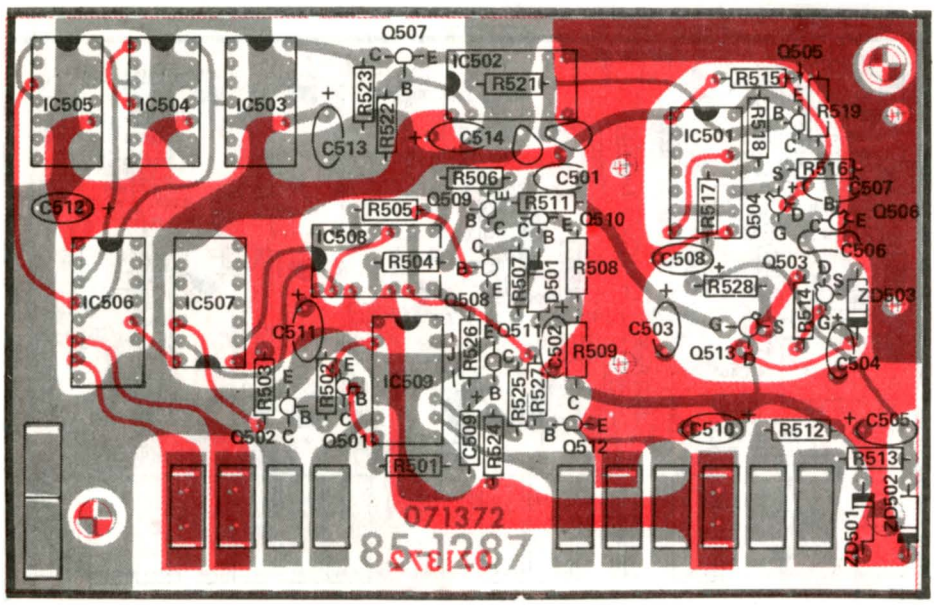

FOIL SIDE VIEW
(Component side foil in red)

COUNTER CIRCUIT BOARD

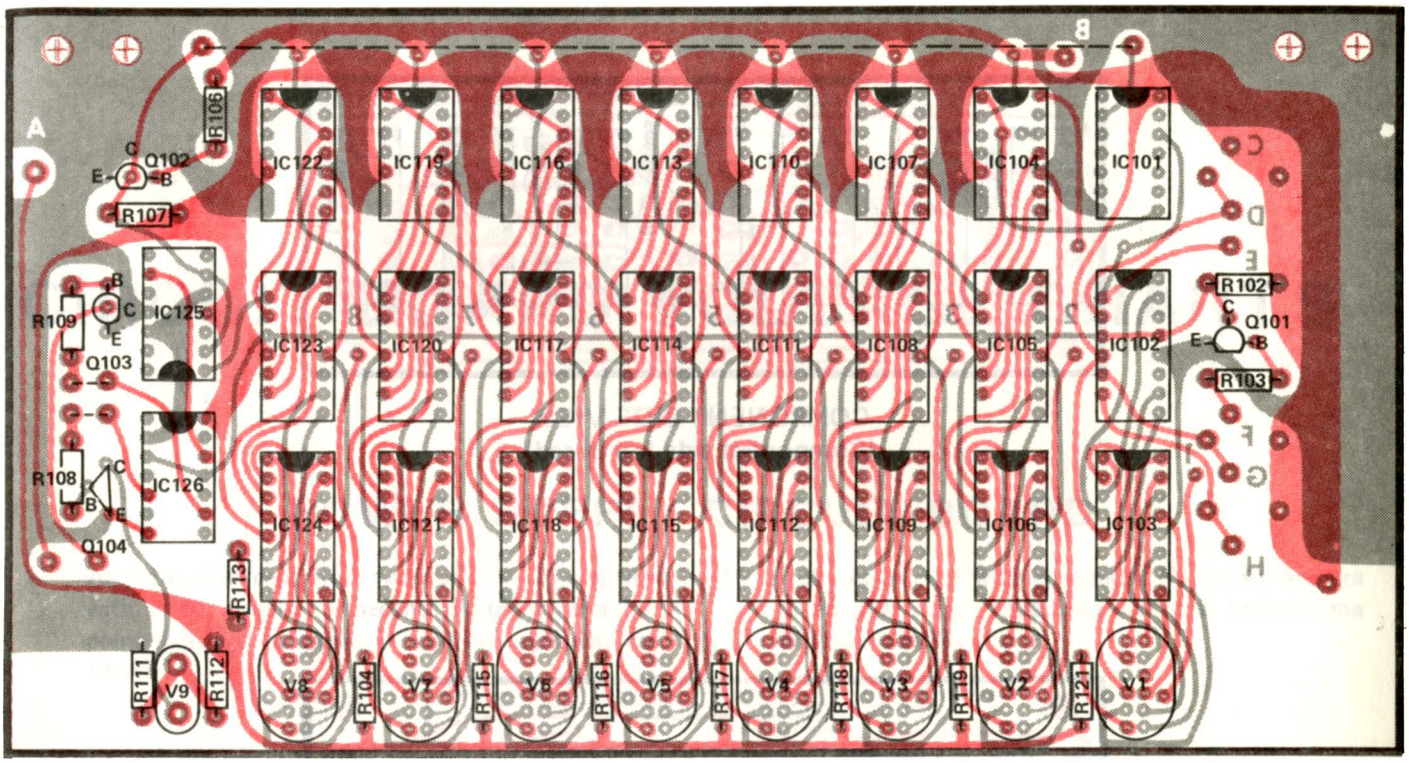

COMPONENT SIDE VIEW
(Component side foil in red)

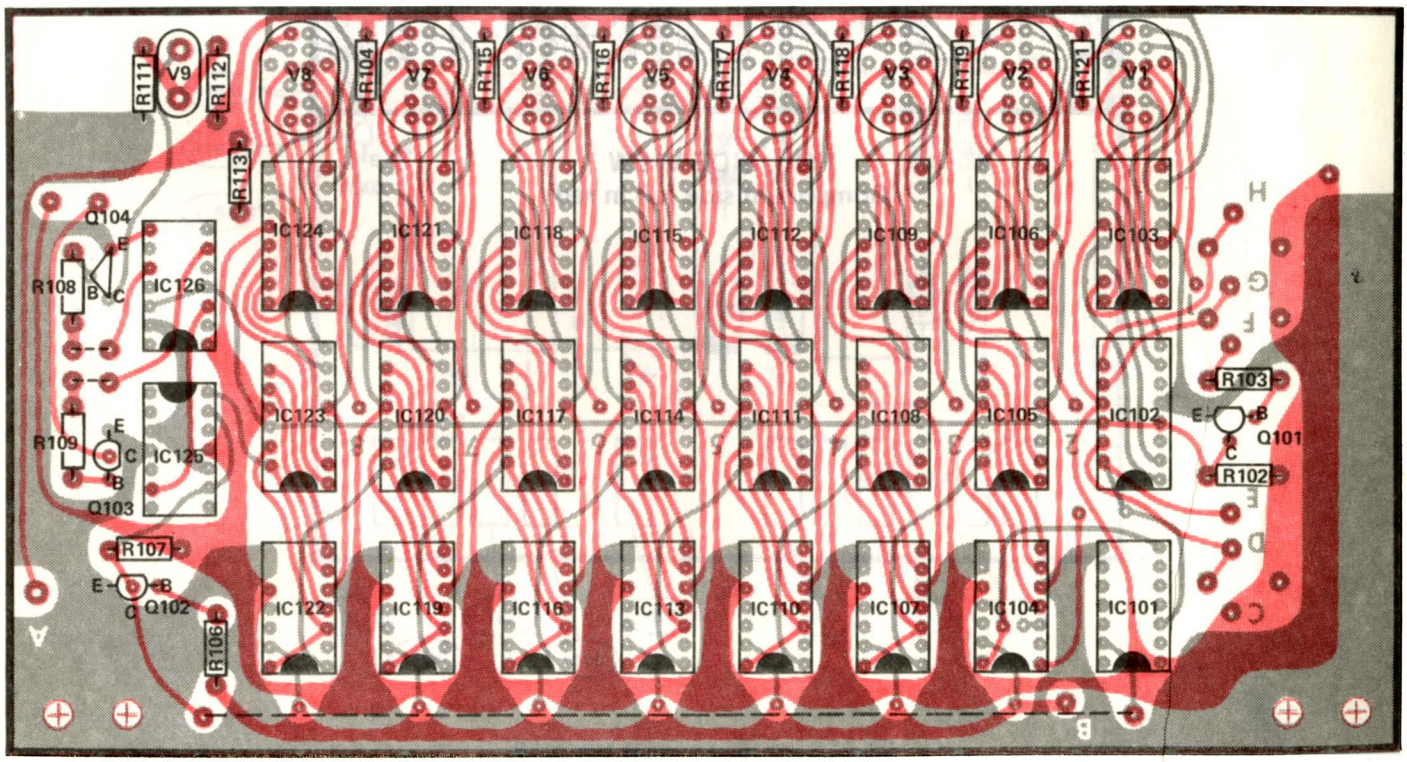

FOIL SIDE VIEW
(Component side foil in red)

SWITCH CIRCUIT BOARD

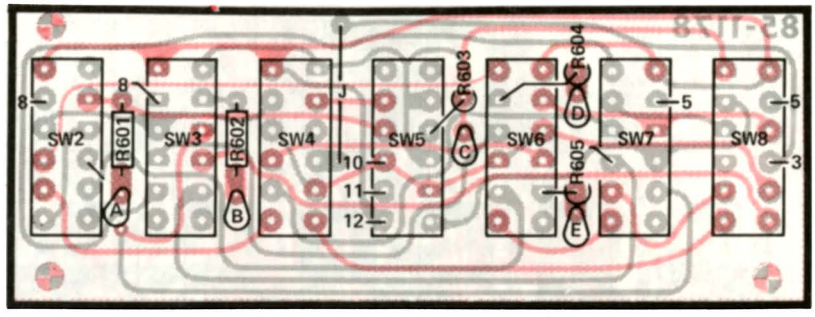

COMPONENT SIDE VIEW
(Component side foil in red)

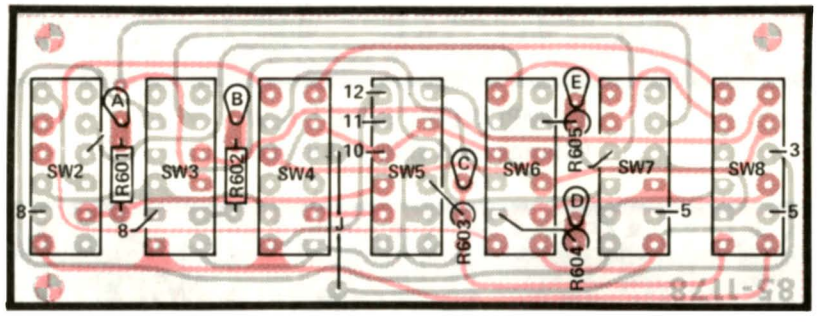

FOIL SIDE VIEW
(Component side foil in red)

CIRCUIT BOARD VOLTAGE CHARTS

POWER SUPPLY CIRCUIT BOARD

1. All voltages (except those marked *) are DC and taken with a 10 megohm impedance voltmeter from the point indicated to chassis ground. Voltages may vary ±10%.

2. Voltages marked with an asterisk (*) are AC and are taken with a high impedance voltmeter between the two points indicated.

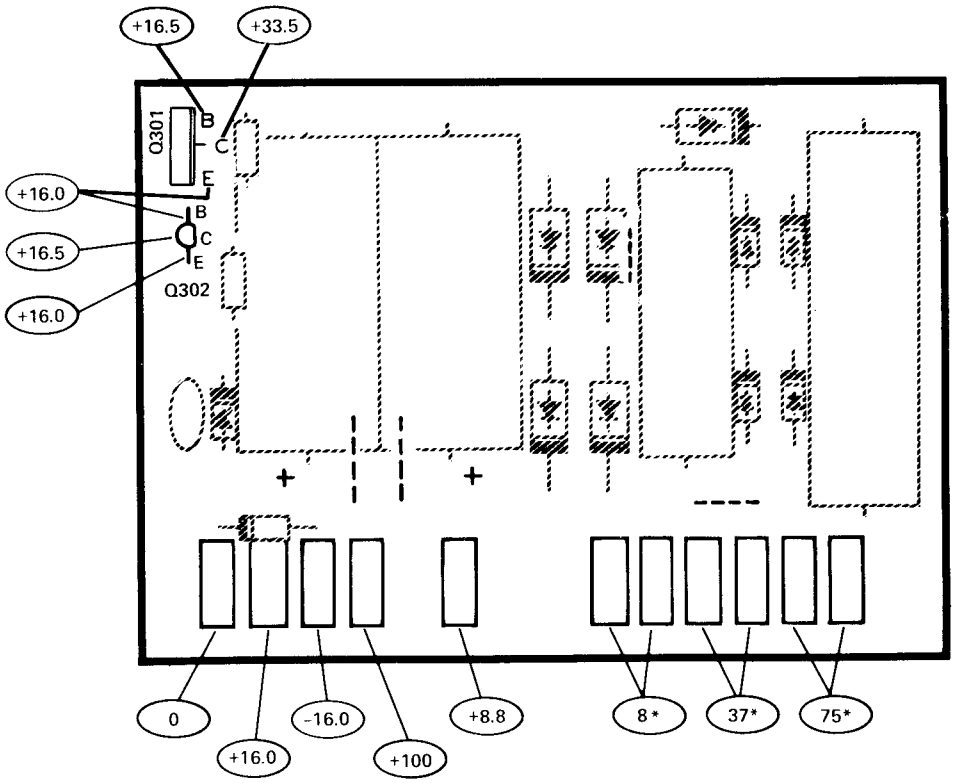

(Viewed from component side)

TIME BASE CIRCUIT BOARD

NOTES:

1. All voltages shown are DC and taken with a 10 megohm impedance voltmeter from the point indicated to chassis ground with no input signal.
2. Voltage may vary ±10%.
3. Voltage may vary ±5%.
4. IC voltages are TTL logic levels of 0.4 V to 3.0 V ±20%.

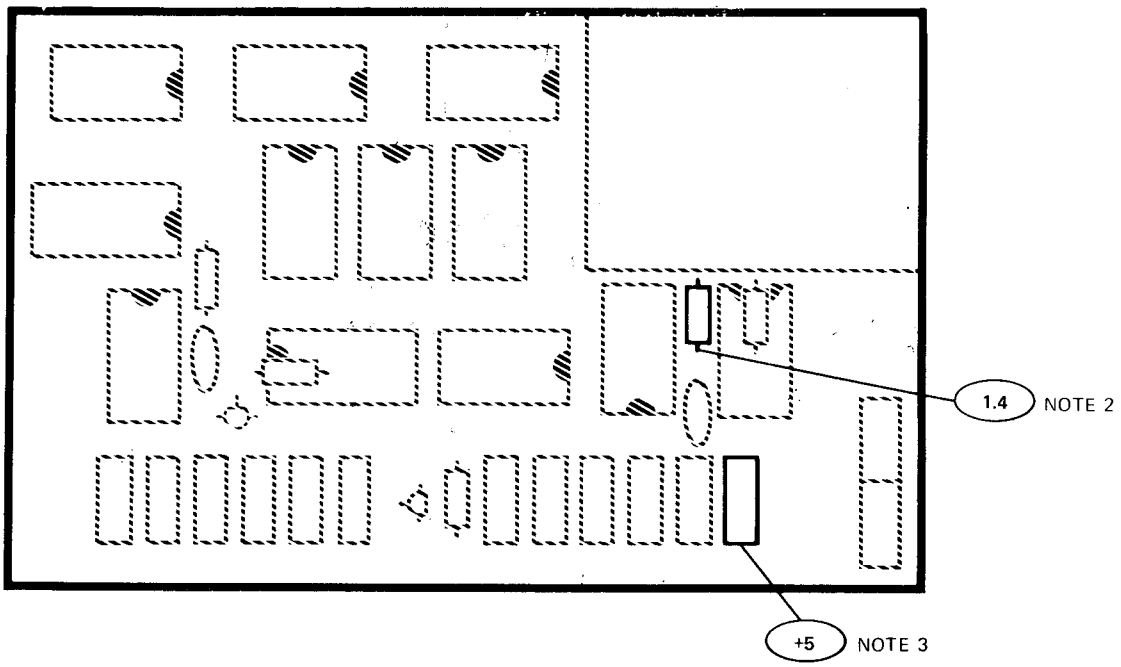

(Viewed from component side)

FREQUENCY MULTIPLIER CIRCUIT BOARD

NOTES:

1. All voltages shown are DC and taken with a 10 megohm impedance voltmeter from the point indicated to chassis ground.
2. Voltage may vary ±10%.

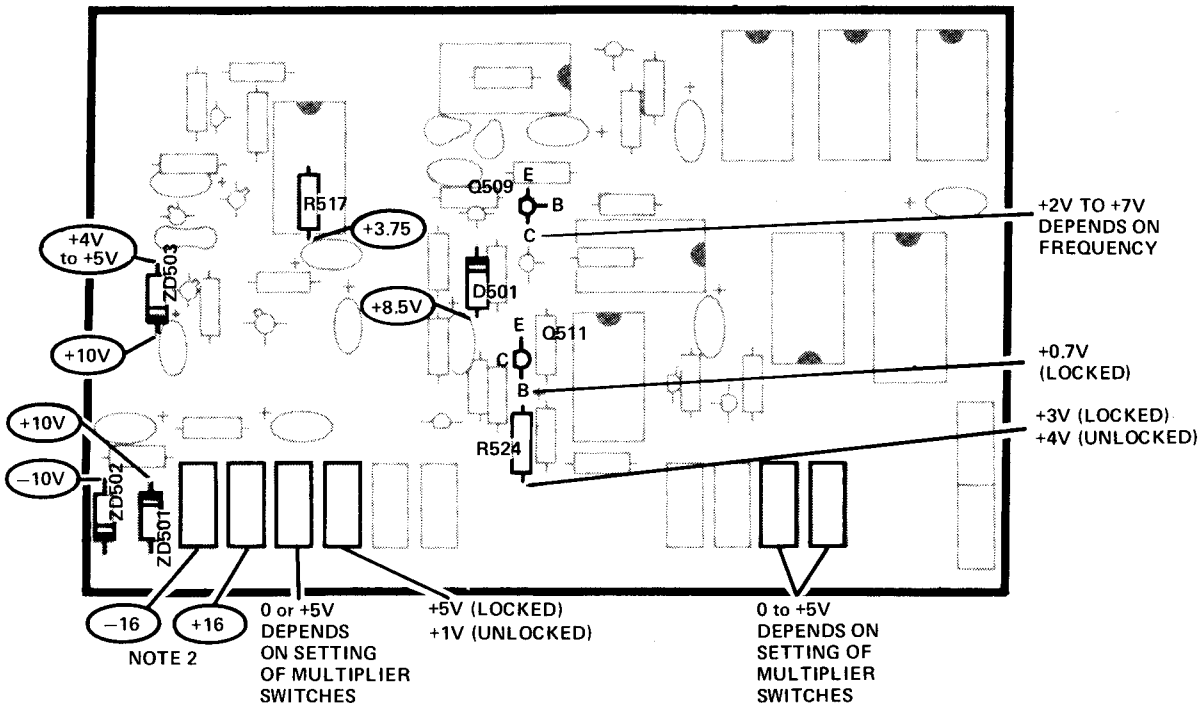

(Viewed from component side)

INPUT CIRCUIT BOARD

NOTES:

1. All voltages shown are DC and taken with a 10 megohm impedance voltmeter from the point indicated to chassis ground with no input signal. Voltages may vary ±10%.

2. The voltages at these points are TTL logic levels of 0.4 V to 3.0 V ±20%. All other logic voltages are ECL logic levels of +3.4 V to 4.2 V.

3. *These voltages may vary ±50%.

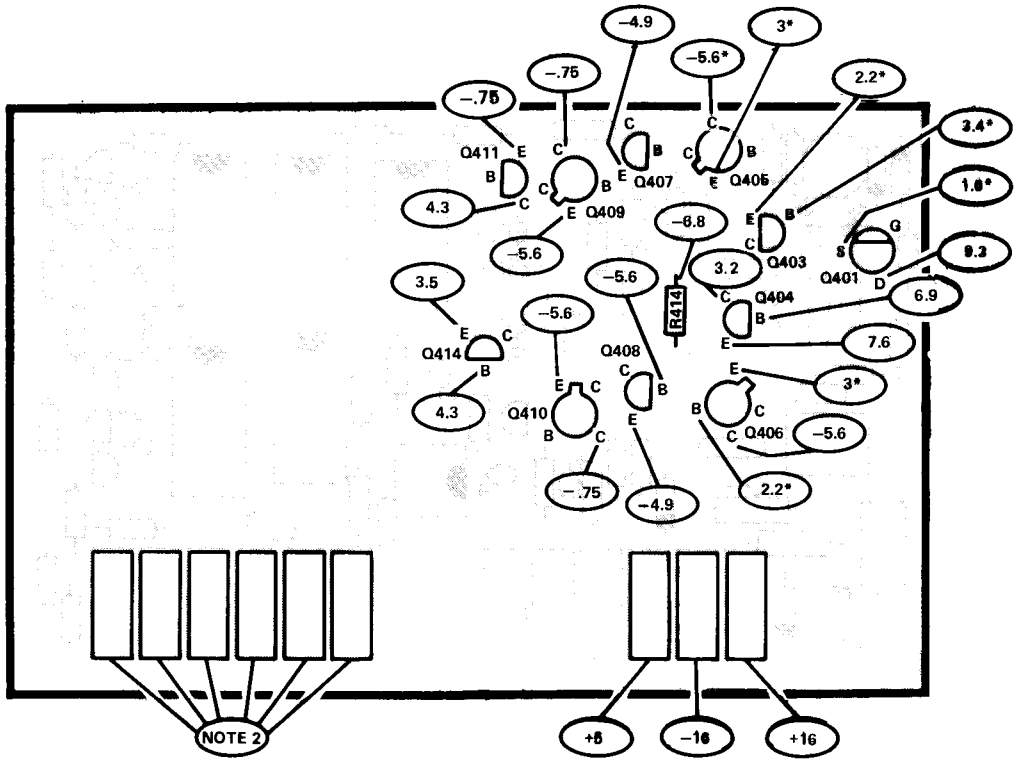

(Viewed from component side)

COUNTER CIRCUIT BOARD

NOTES:

1. All voltages shown are DC and taken with a 10 megohm impedance voltmeter from the point indicated to chassis ground with no input signal. Voltages may vary ±10%.
2. IC voltages are TTL logic levels of 0.4 V to 3.0 V ±20%.

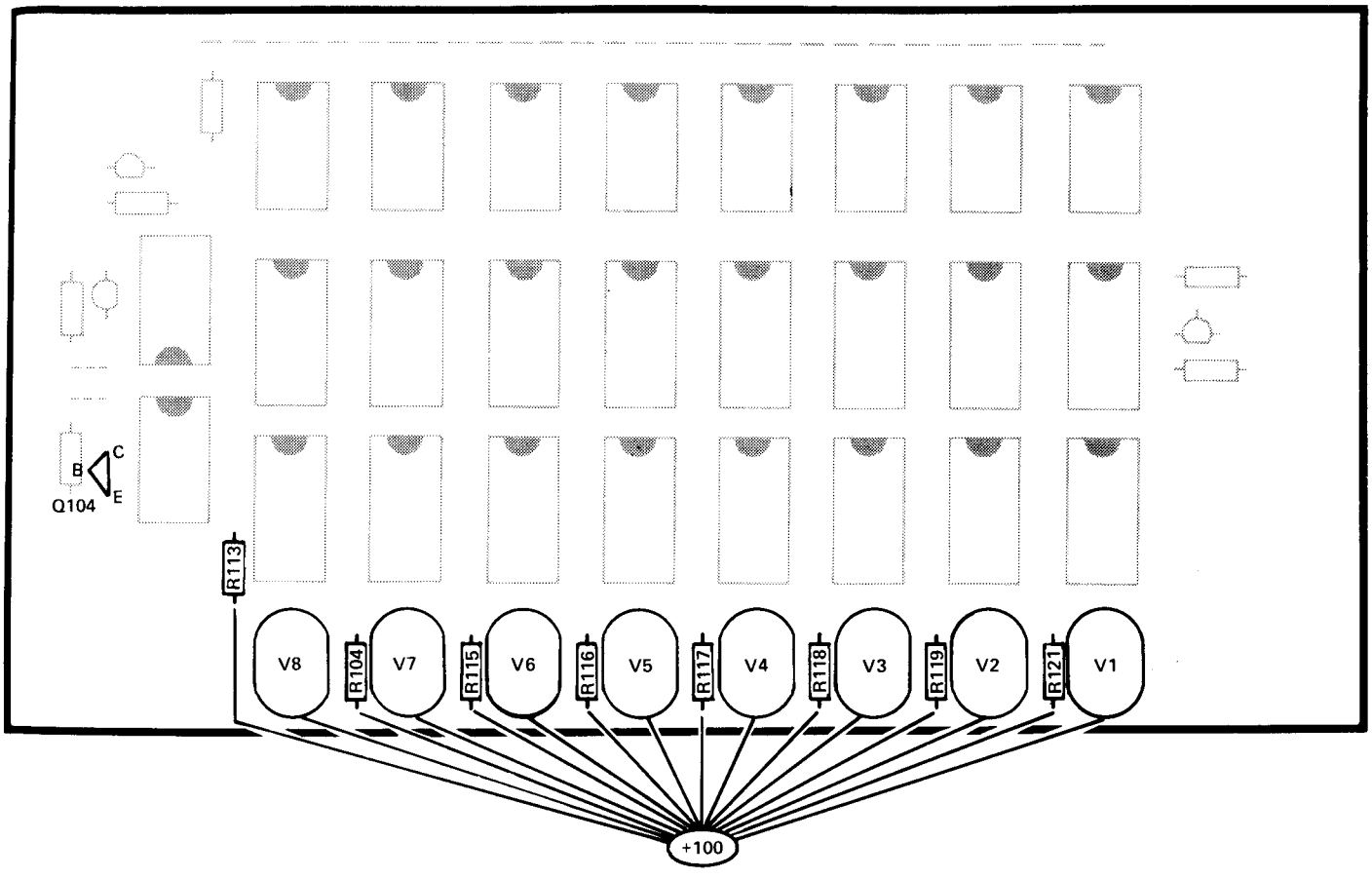

(Viewed from component side)

IDENTIFICATION CHART

TRANSISTORS

COMPONENT	HEATH PART NUMBER	MAY BE REPLACED WITH	BASE DIAGRAM (BOTTOM VIEW)
V1, V2, V3, V4, V5, V6, V7, V8,	411-264	NATIONAL ELECTRONICS NL950S OR BURROUGHS B-5859S	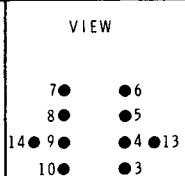 PIN CONNECTION 1 NUMERAL 1 2 NUMERAL 2 3 NUMERAL 3 4 NUMERAL 4 5 NUMERAL 5 6 NUMERAL 6 7* ANODE 8 NUMERAL 7 9 NUMERAL 8 10* ANODE 11 NUMERAL 9 12 NUMERAL 0 13 RT. DEC. PT. 14 LFT. DEC. PT. *CONNECTED INTERNALLY
Q101, Q102, Q103, Q201, Q202, Q302, Q511, Q512,	417-118	2N3393	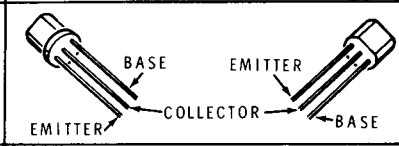
Q509	417-134	MPS 6520	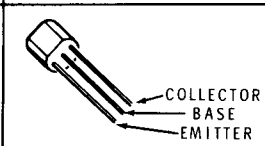
Q504, Q513	417-140	2N4304	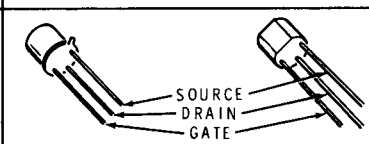
Q506	417-154	2N2369	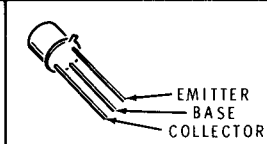
Q104	417-294	MPSA42	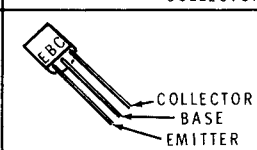
Q301	417-203	TA7311	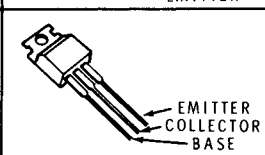

COMPONENT	HEATH PART NUMBER	MAY BE REPLACED WITH	BASE DIAGRAM (BOTTOM VIEW)
Q401	417-802	E304 (SELECTED)	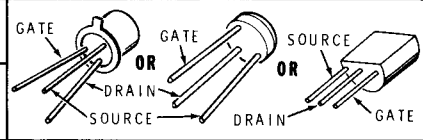
Q504	417-828	E304	
Q404, Q415, Q416, Q417, Q418, Q419, Q420, Q501, Q505, Q507, Q510	417-235	2N4121	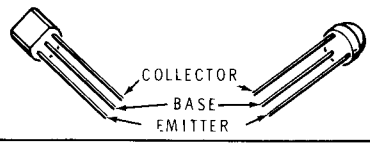
Q503	417-820	2N4342 (SELECTED)	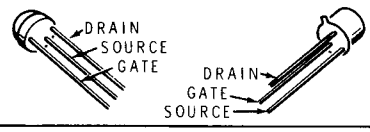
Q502, Q508	417-267	MPS6560	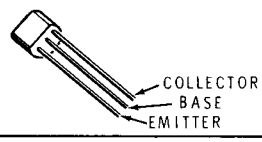
Q409, Q410	417-290	MRF-502	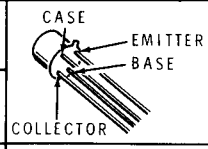
Q405, Q406	417-813	2N4959	
Q402, Q407, Q408, Q421, Q422	417-292	2N5771	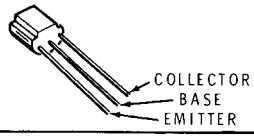
Q403, Q411, Q412, Q413, Q414	417-293	2N5770	

DIODES

COMPONENT	HEATH PART NUMBER	MAY BE REPLACED WITH	LEAD DIAGRAM (BOTTOM VIEW)
ZD302	56-36	VR-16.1G 16.1 VOLT, 12mA ZENER	
D502	56-56	IN4149	
D403, D404 D501	56-61	GESTB-620 1.3 VOLT, 1mA STABISTOR	
ZD503	56-615	LNA 356 (SELECTED) 5.6 VOLT, ZENER	
ZD401, ZD402, ZD501, ZD502	56-67	VR-10A 10VOLT, 12mA ZENER	
D401, D402	56-86	FD777	
D301	57-27	1N2071	
D307, D308, D309, D306	57-42	3A1	
D302, D303, D304, D305	57-65	1N4002	
ZD301	56-606	1N5353B	

INTEGRATED CIRCUITS

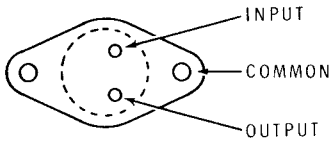

IC1-IC2
μA309K
5-VOLT REGULATOR
#442-30

TOP VIEW

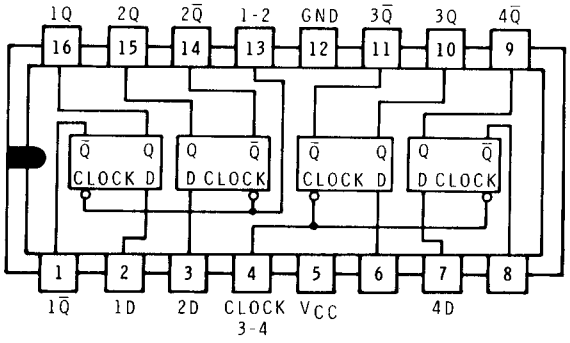

IC102
IC105
IC108
IC111
IC114
IC117
IC120
IC123

SN7475N 4-BIT
BISTABLE LATCH
#443-13

TOP VIEW

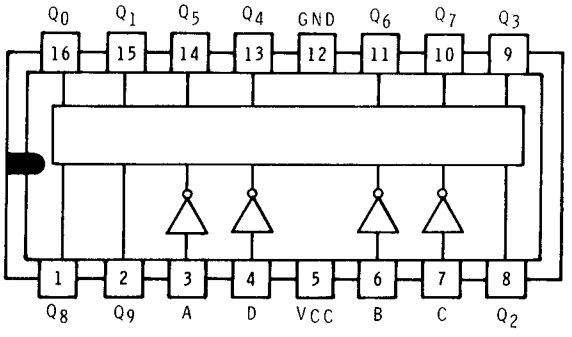

IC103
IC106
IC109
IC112
IC115
IC118
IC121
IC124

N7441B BCD-TO-DECIMAL
DECODER/DRIVER
#443-35

TOP VIEW

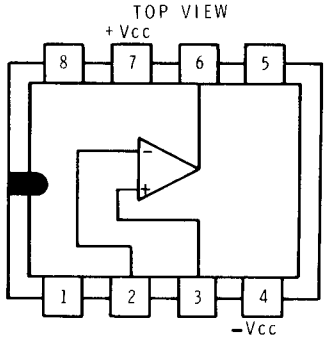

IC401
N5741V
OPERATIONAL
AMPLIFIER
#442-22

TOP VIEW

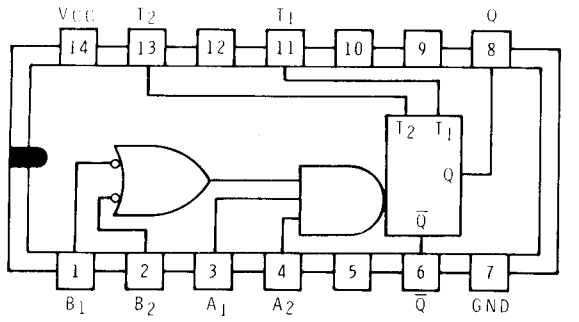

IC208

SN74122N RETRIGGERABLE
MONOSTABLE MULTIVIBRATOR
#443-23

TOP VIEW

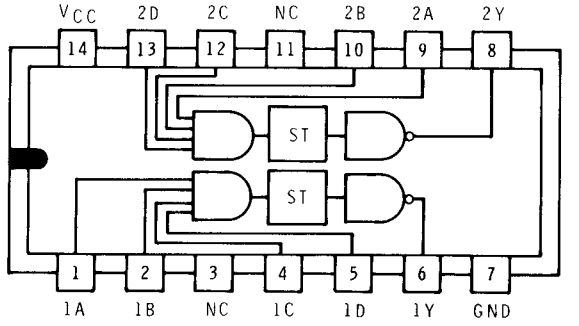

IC212

SN7413N DUAL NAND
SCHMITT TRIGGER
#443-44

TOP VIEW

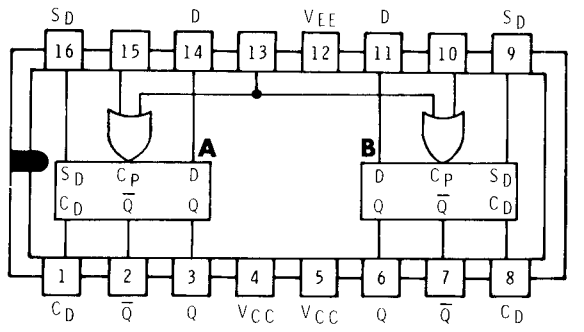

IC402
IC405
IC406

95H2859 DUAL D-TYPE
180MHZ FLIP-FLOP
#443-83

TOP VIEW

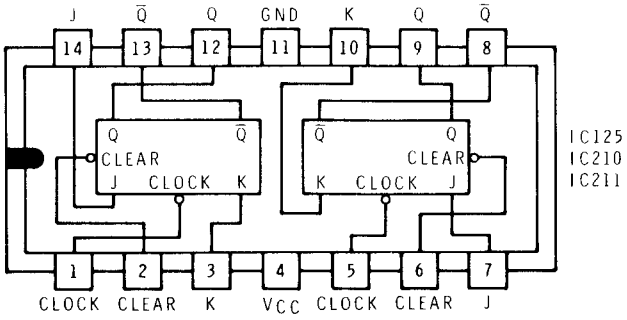

SN7473N DUAL J-K
MASTER-SLAVE FLIP-FLOP
#443-5

TOP VIEW

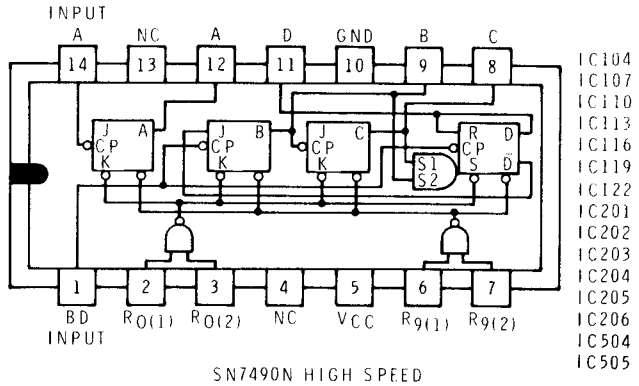

SN7490N HIGH SPEED
BCD DECADE COUNTER
#443-7
SN7490A, 443-629, USED AT IC503

TOP VIEW

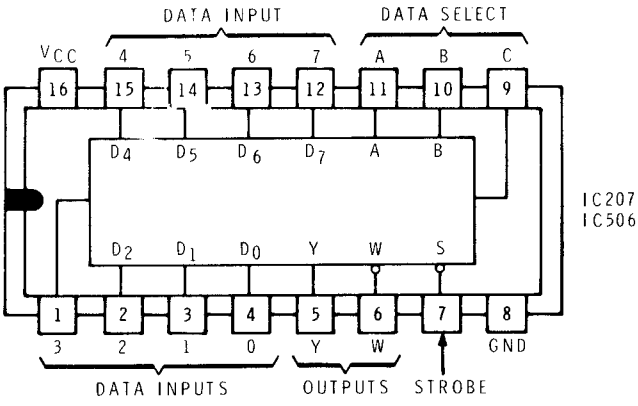

SN7415N MULTIPLEXER
#443-25

TOP VIEW

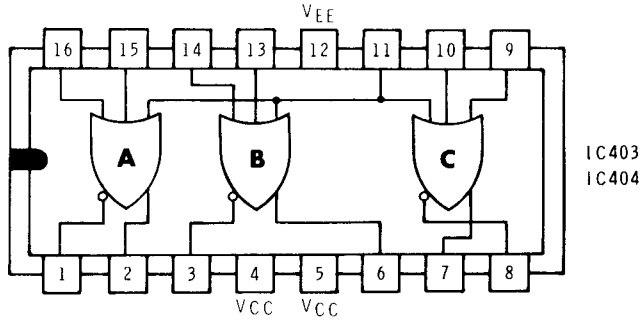

95H0359 TRIPLE 2
OR/NOR GATE
#443-79

TOP VIEW

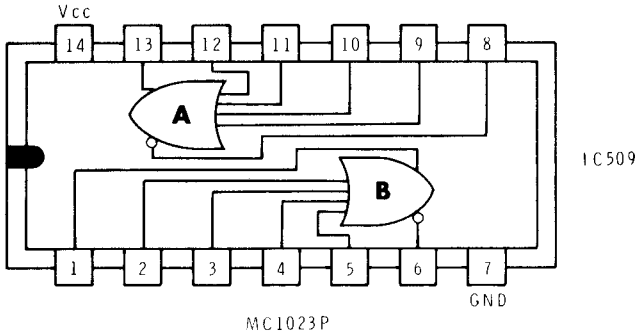

MC1023P
DUAL 4-INPUT GATE
#443-624

TOP VIEW

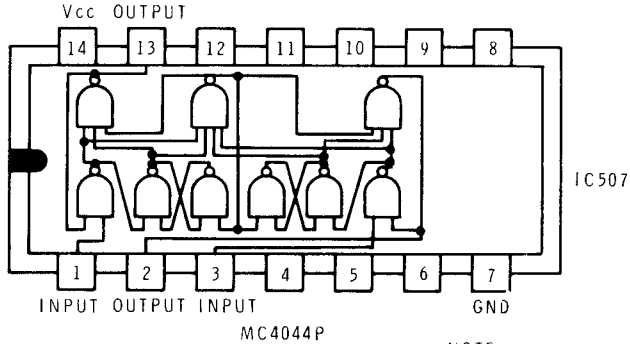

MC4044P
PHASE DETECTOR
#443-62

NOTE:
PORTIONS OF THIS IC
ARE NOT SHOWN.

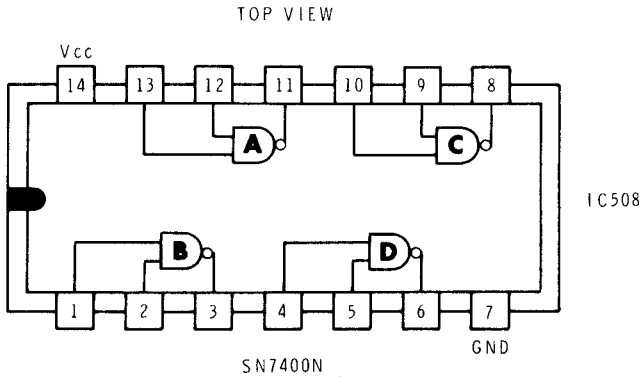

SN7400N
QUAD 2-INPUT GATE
#443-1

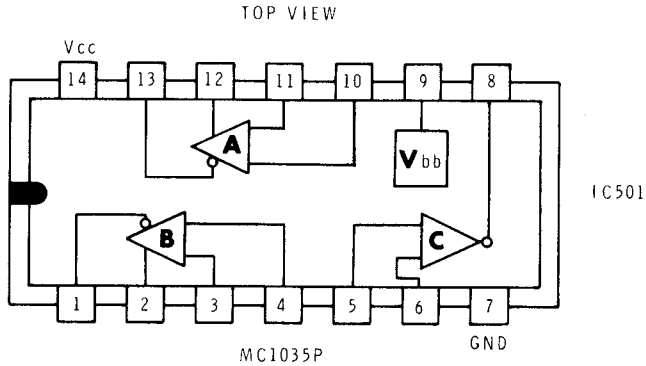

MC1035P
TRIPLE DIFFERENTIAL AMPLIFIER
#443-80

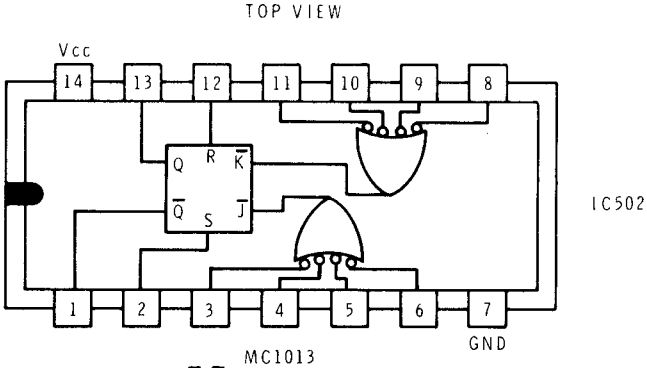

MC1013
J̄-K̄ FLIP-FLOP
#443-40

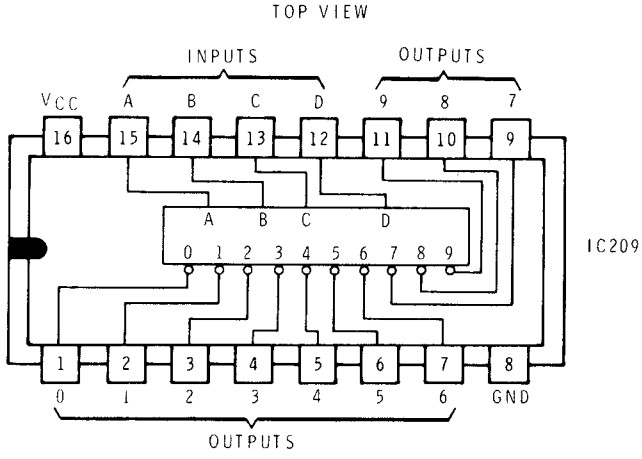

SN7442N 4-TO-10 LINE
DECODER
#443-53

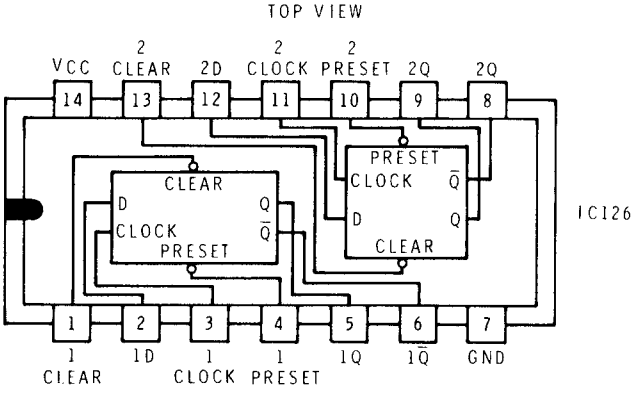

SN7474N DUAL D-TYPE
EDGE-TRIGGERED FLIP-FLOP
#443-6

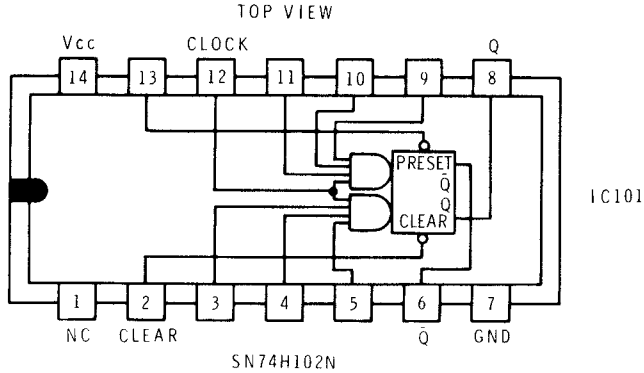

SN74H102N
J-K EDGE-TRIGGERED FLIP-FLOP
#443-43