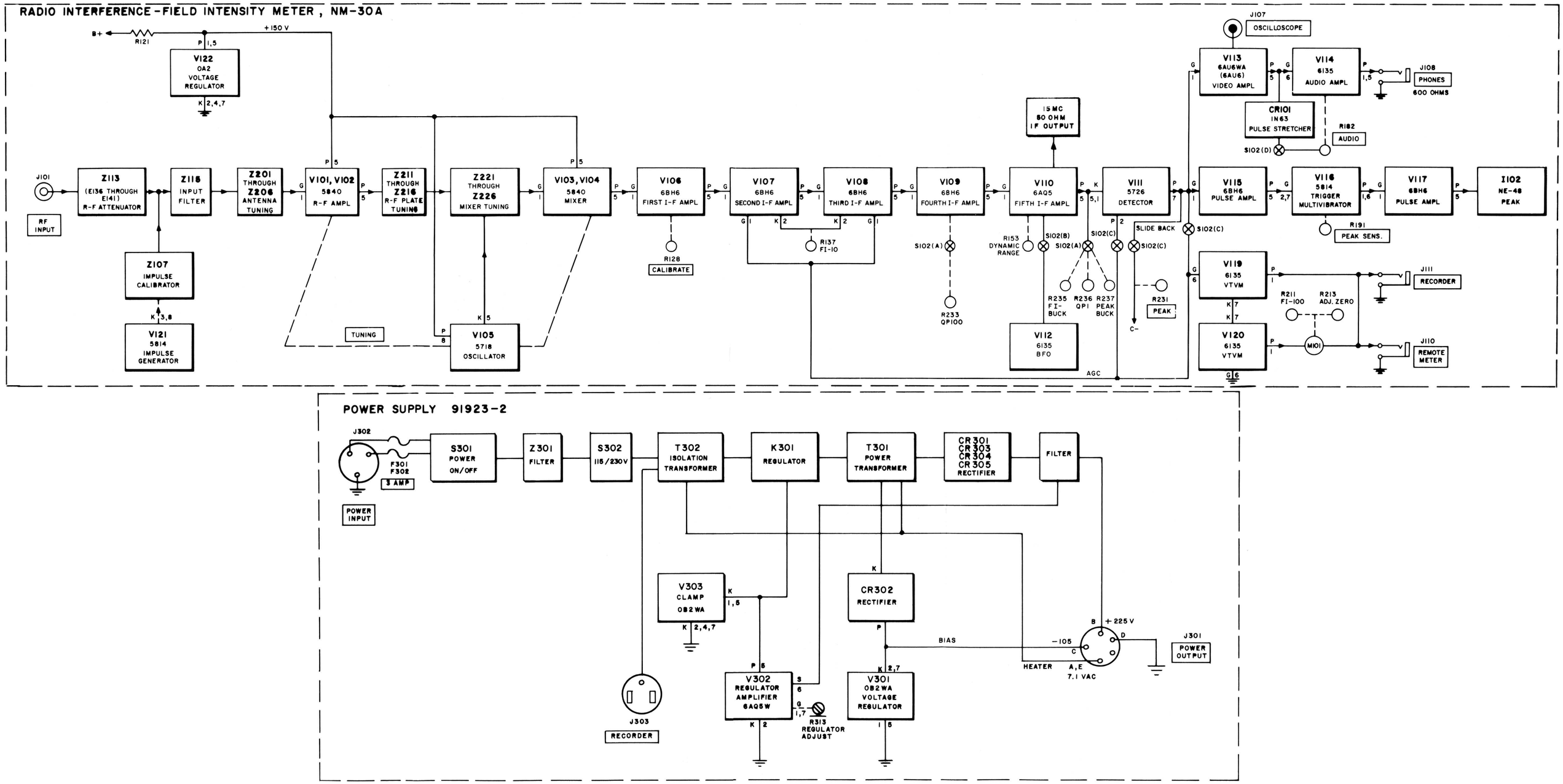

FIGURE 2-1. RADIO INTERFERENCE FIELD INTENSITY MEASURING EQUIPMENT-OVERALL BLOCK DIAGRAM

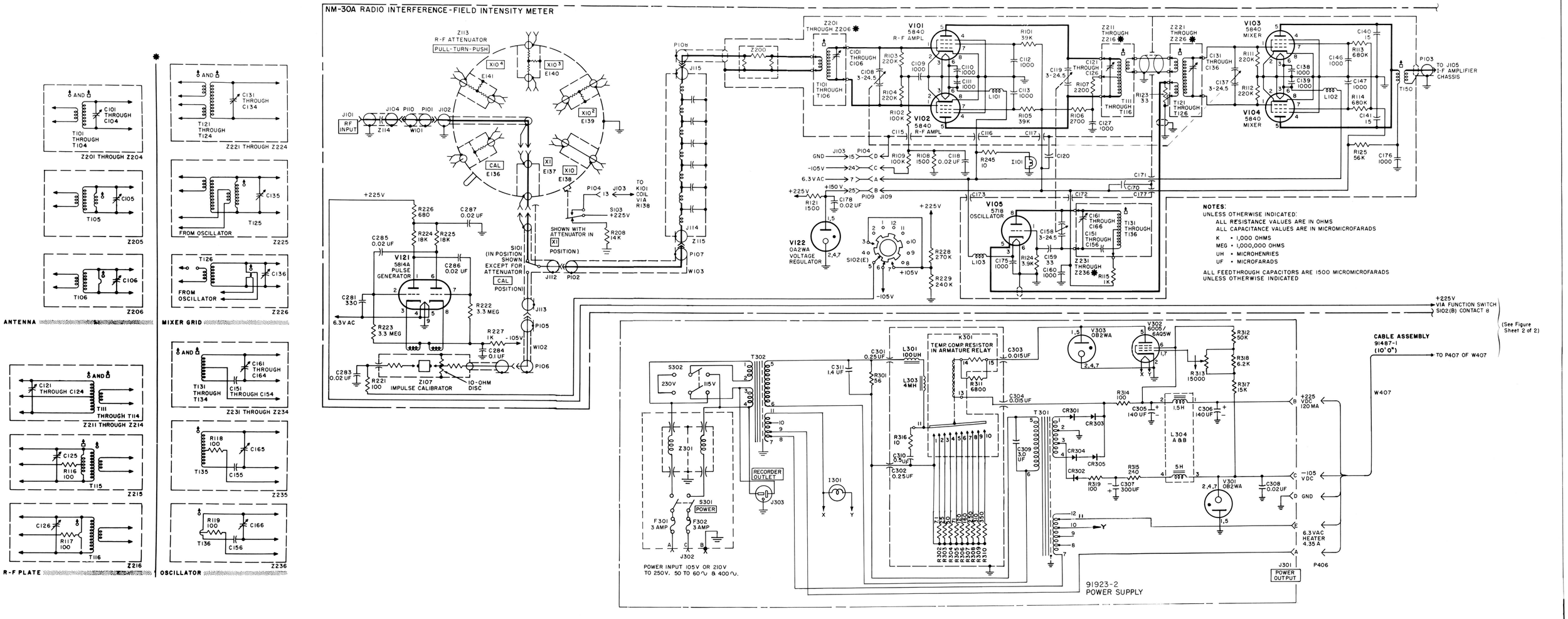

Fig. 5-1, NM-30A Radio Interference-Field Intensity Measuring Equipment
Overall Schematic Diagram
(Reprinted 5-3-61)

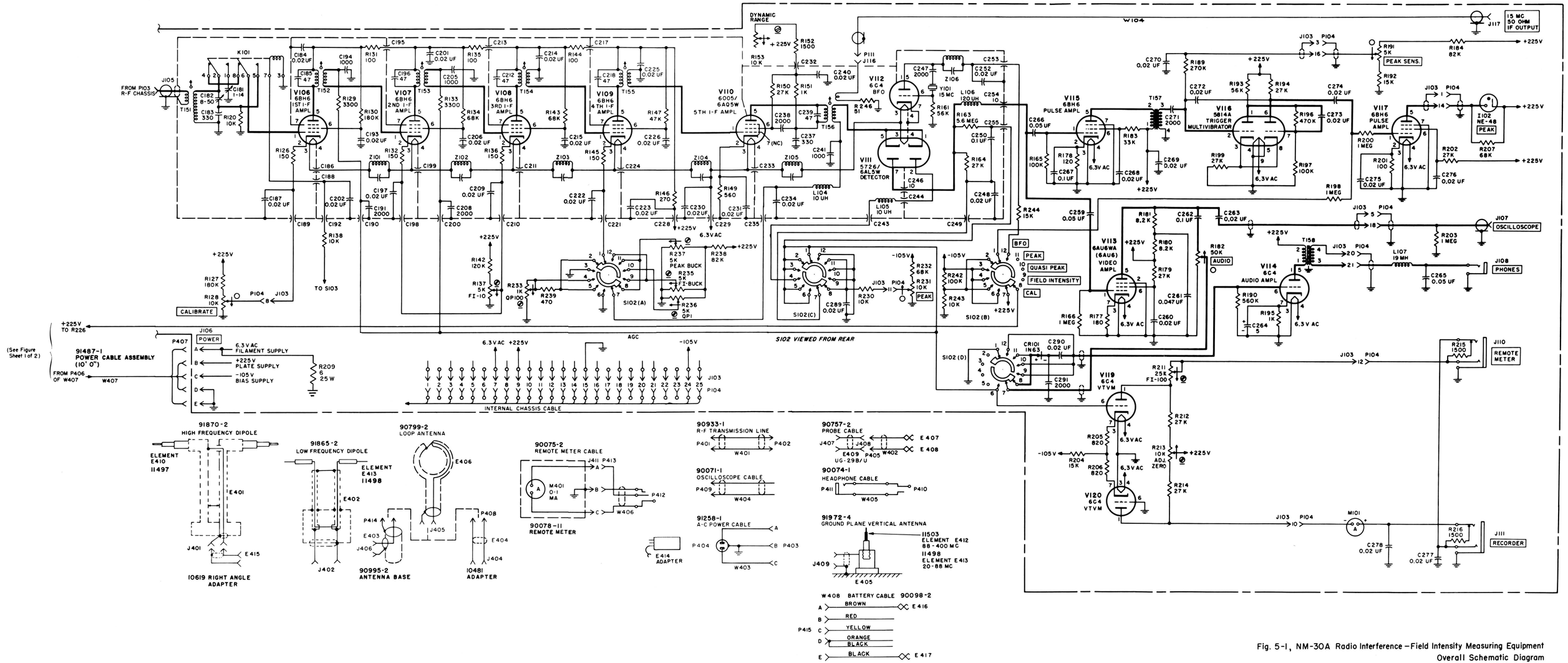

Fig. 5-1, NM-30A Radio Interference–Field Intensity Measuring Equipment Overall Schematic Diagram (Reprinted 5-3-61)