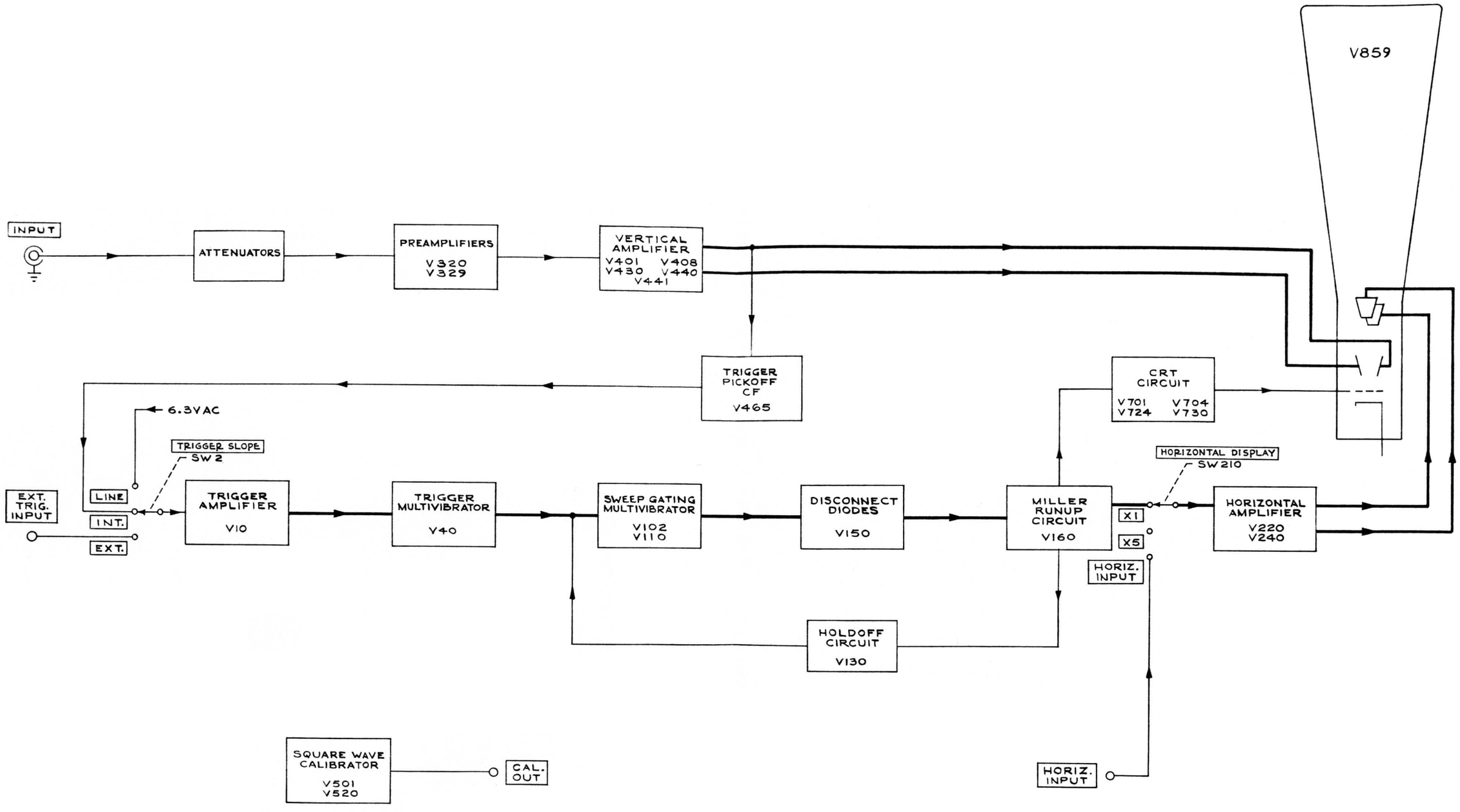

TYPE 310 / 310A OSCILLOSCOPE

AA,

MRH
8-22-62

BLOCK DIAGRAM

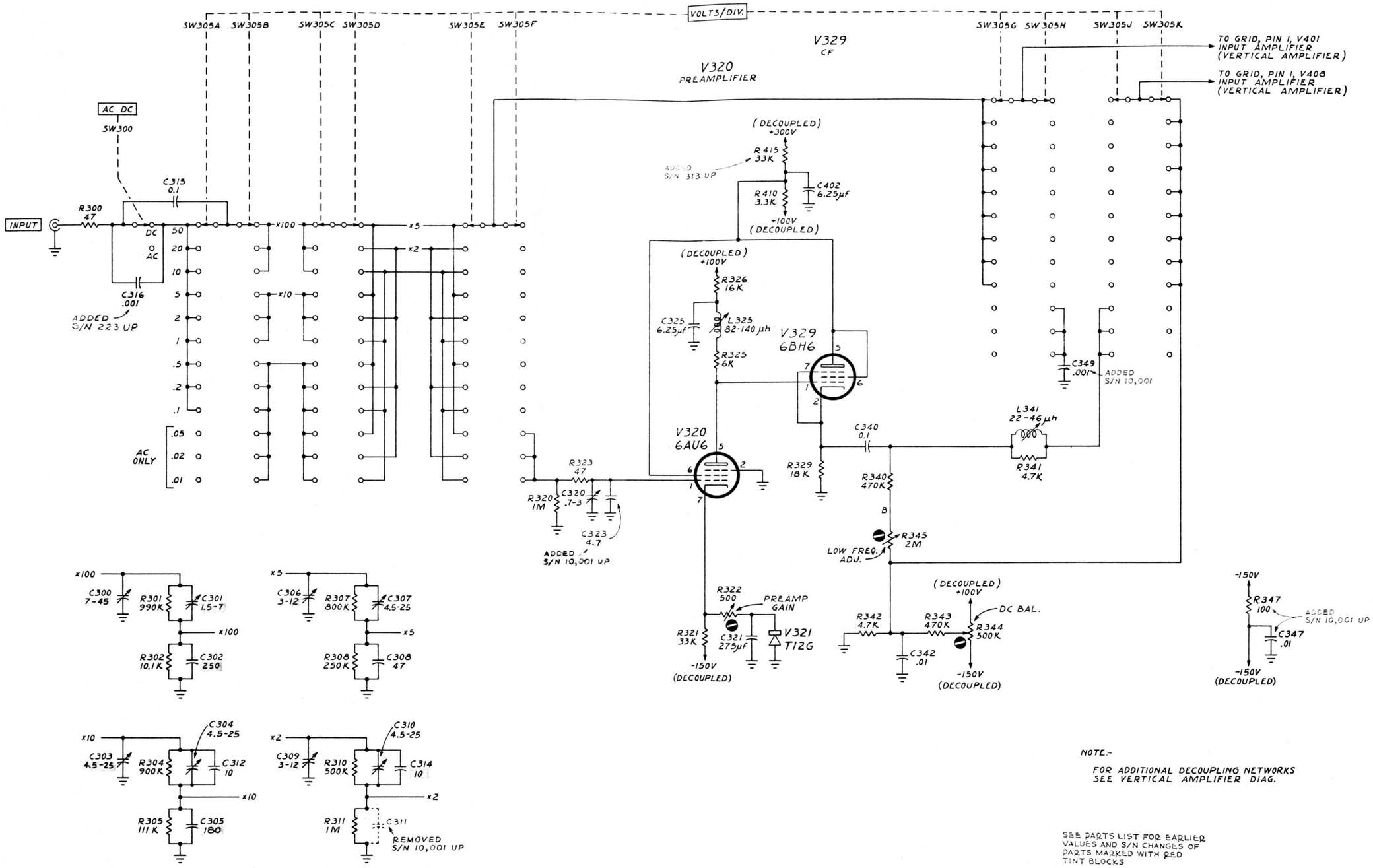

NOTE.-

FOR ADDITIONAL DECOUPLING NETWORKS SEE VERTICAL AMPLIFIER DIAG.

SEE PARTS LIST FOR EARLIER VALUES AND S/N CHANGES OF PARTS MARKED WITH RED TINT BLOCKS

TYPE 310/310A OSCILLOSCOPE

PREAMPLIFIER

8-28-62
KF

CIRCUIT NUMBERS
300 THRU 399

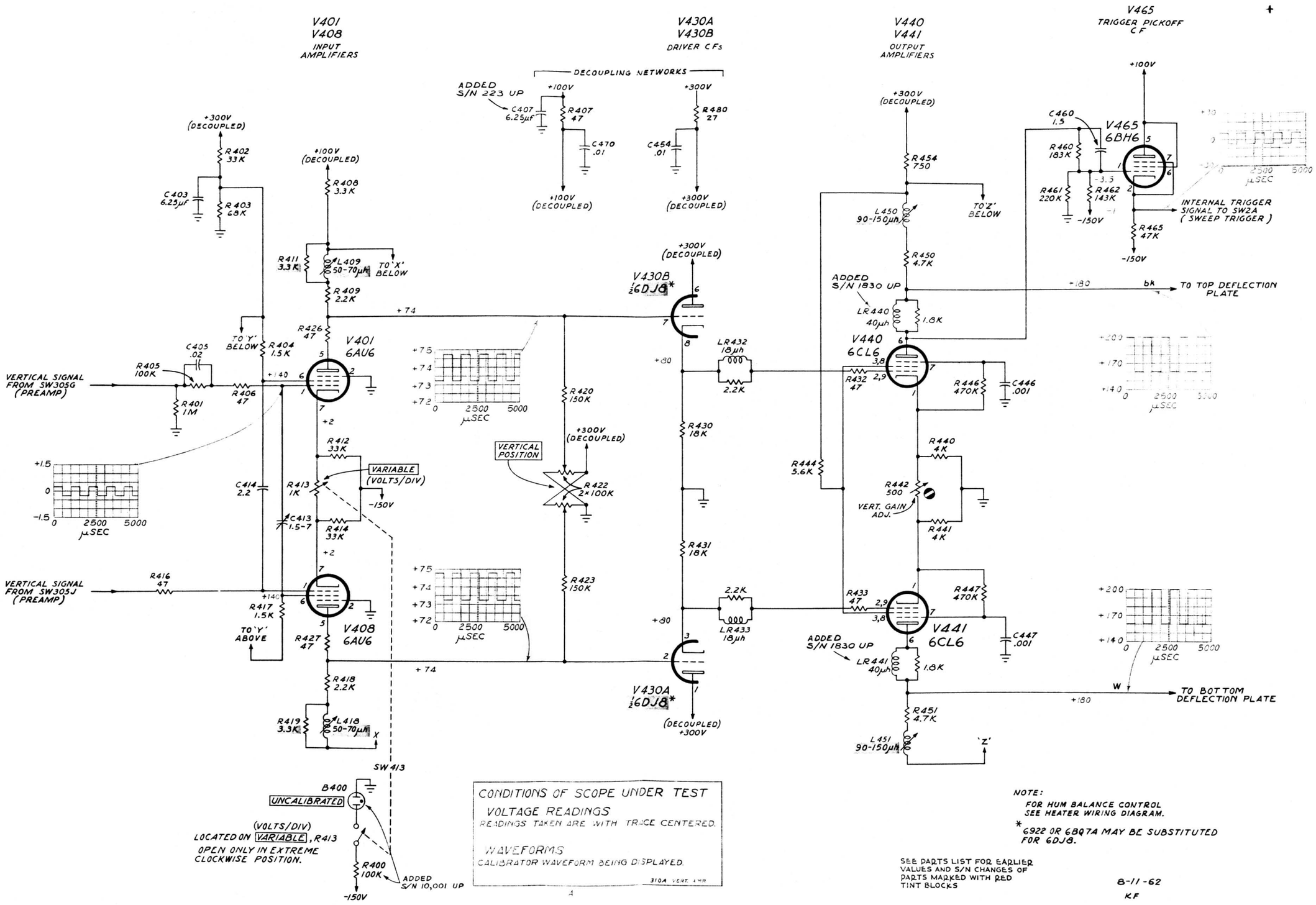
V401
V408
INPUT AMPLIFIERS
V430A
V430B
DRIVER CFs
V440
V441
OUTPUT AMPLIFIERS
V465
TRIGGER PICKOFF CF
DECOUPLING NETWORKS
ADDED S/N 223 UP
C407 6.25µf
R407 47
C470 .01
C454 .01
R480 27
+100V (DECOUPLED)
+300V (DECOUPLED)
R402 33K
C403 6.25µf
R403 68K
R408 3.3K
R411 3.3K
L409 50-70µh
TO 'X' BELOW
R409 2.2K
R426 47
V401 6AU6
TO 'Y' BELOW
R404 1.5K
C405 .02
R405 100K
R401 1M
R406 47
VERTICAL SIGNAL FROM SW305G (PREAMP)
R412 33K
R413 1K
VARIABLE (VOLTS/DIV)
-150V
C414 2.2
C413 1.5-7
R414 33K
VERTICAL SIGNAL FROM SW305J (PREAMP)
R416 47
R417 1.5K
TO 'Y' ABOVE
R427 47
V408 6AU6
R418 2.2K
R419 3.3K
L418 50-70µh
SW413
B400
UNCALIBRATED
(VOLTS/DIV) LOCATED ON VARIABLE, R413 OPEN ONLY IN EXTREME CLOCKWISE POSITION.
R400 100K
ADDED S/N 10,001 UP
-150V
VERTICAL POSITION
R422 2x100K
R420 150K
R423 150K
V430B ½6DJ8*
V430A ½6DJ8*
(DECOUPLED) +300V
LR432 18µh
2.2K
R430 18K
R431 18K
LR433 18µh
R454 750
L450 90-150µh
TO 'Z' BELOW
R450 4.7K
ADDED S/N 1830 UP
LR440 40µh
1.8K
V440 6CL6
R432 47
R444 5.6K
R446 470K
C446 .001
R440 4K
R442 500
VERT. GAIN ADJ.
R441 4K
R433 47
V441 6CL6
R447 470K
C447 .001
LR441 40µh
R451 4.7K
L451 90-150µh
'Z'
TO TOP DEFLECTION PLATE
TO BOTTOM DEFLECTION PLATE
C460 1.5
V465 6BH6
R460 183K
R461 220K
R462 143K
R465 47K
INTERNAL TRIGGER SIGNAL TO SW2A (SWEEP TRIGGER)
µSEC
CONDITIONS OF SCOPE UNDER TEST
VOLTAGE READINGS
READINGS TAKEN ARE WITH TRACE CENTERED.
WAVEFORMS
CALIBRATOR WAVEFORM BEING DISPLAYED.
310A VERT. AMP
A
NOTE:
FOR HUM BALANCE CONTROL SEE HEATER WIRING DIAGRAM.
* 6922 OR 6BQ7A MAY BE SUBSTITUTED FOR 6DJ8.
SEE PARTS LIST FOR EARLIER VALUES AND S/N CHANGES OF PARTS MARKED WITH RED TINT BLOCKS
8-11-62
KF
TYPE 310/310A OSCILLOSCOPE
VERTICAL AMPLIFIER
CIRCUIT NUMBERS 400 THRU 480
AA1

CONDITIONS OF SCOPE UNDER TEST

VOLTAGE READINGS

UPPER READINGS - TRIG. LEVEL CONTROL CCW
LOWER READINGS - TRIG. LEVEL CONTROL CW

WAVEFORMS

SWITCHES AS SHOWN
CALIBRATOR WAVEFORM BEING DISPLAYED

310A SWP. TRIG.

A

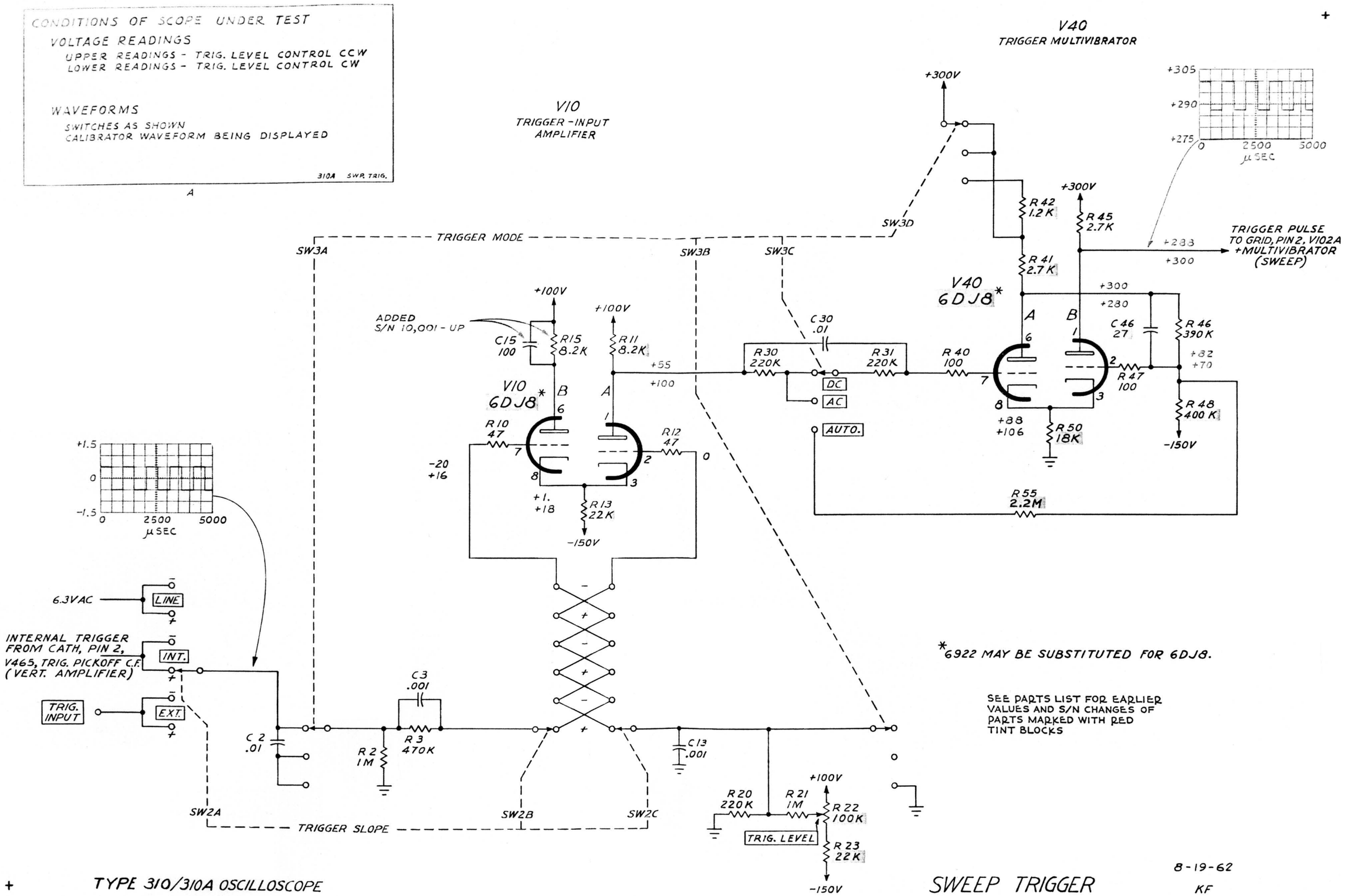

*6922 MAY BE SUBSTITUTED FOR 6DJ8.

SEE PARTS LIST FOR EARLIER VALUES AND S/N CHANGES OF PARTS MARKED WITH RED TINT BLOCKS

+ TYPE 310/310A OSCILLOSCOPE

SWEEP TRIGGER

8-19-62
KF

CIRCUIT NUMBERS 1 THRU 49

AB2

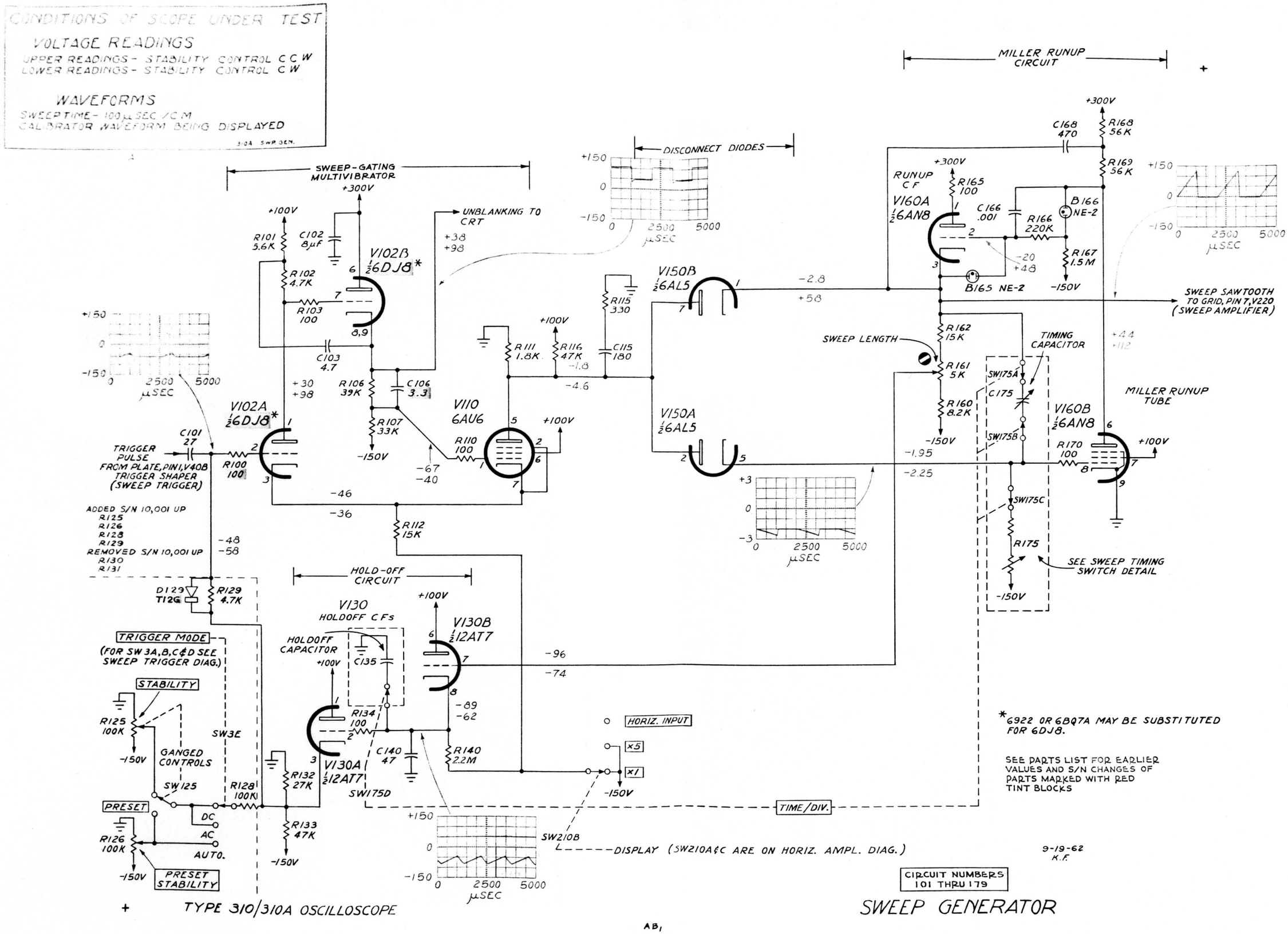
CONDITIONS OF SCOPE UNDER TEST
VOLTAGE READINGS
UPPER READINGS - STABILITY CONTROL CCW
LOWER READINGS - STABILITY CONTROL CW
WAVEFORMS
SWEEP TIME - 100 μSEC/CM
CALIBRATOR WAVEFORM BEING DISPLAYED
3-0A SWP GEN.
SWEEP-GATING MULTIVIBRATOR
DISCONNECT DIODES
MILLER RUNUP CIRCUIT
UNBLANKING TO CRT
V102B ½6DJ8*
V102A ½6DJ8*
V110 6AU6
V150B ½6AL5
V150A ½6AL5
V160A ½6AN8
V160B ½6AN8
MILLER RUNUP TUBE
SWEEP SAWTOOTH TO GRID, PIN 7, V220 (SWEEP AMPLIFIER)
SWEEP LENGTH
TIMING CAPACITOR
SEE SWEEP TIMING SWITCH DETAIL
TRIGGER PULSE FROM PLATE, PIN 1, V40B TRIGGER SHAPER (SWEEP TRIGGER)
ADDED S/N 10,001 UP
R125
R126
R128
R129
REMOVED S/N 10,001 UP
R130
R131
HOLD-OFF CIRCUIT
V130 HOLDOFF CFs
V130B ½12AT7
V130A ½12AT7
HOLDOFF CAPACITOR
TRIGGER MODE
(FOR SW3A,B,C&D SEE SWEEP TRIGGER DIAG.)
STABILITY
GANGED CONTROLS
SW3E
SW125
PRESET
DC
AC
AUTO.
PRESET STABILITY
HORIZ. INPUT
X5
X1
TIME/DIV.
SW210B
DISPLAY (SW210A&C ARE ON HORIZ. AMPL. DIAG.)
*6922 OR 6BQ7A MAY BE SUBSTITUTED FOR 6DJ8.
SEE PARTS LIST FOR EARLIER VALUES AND S/N CHANGES OF PARTS MARKED WITH RED TINT BLOCKS
9-19-62
K.F.
CIRCUIT NUMBERS 101 THRU 179
TYPE 310/310A OSCILLOSCOPE
SWEEP GENERATOR
AB1

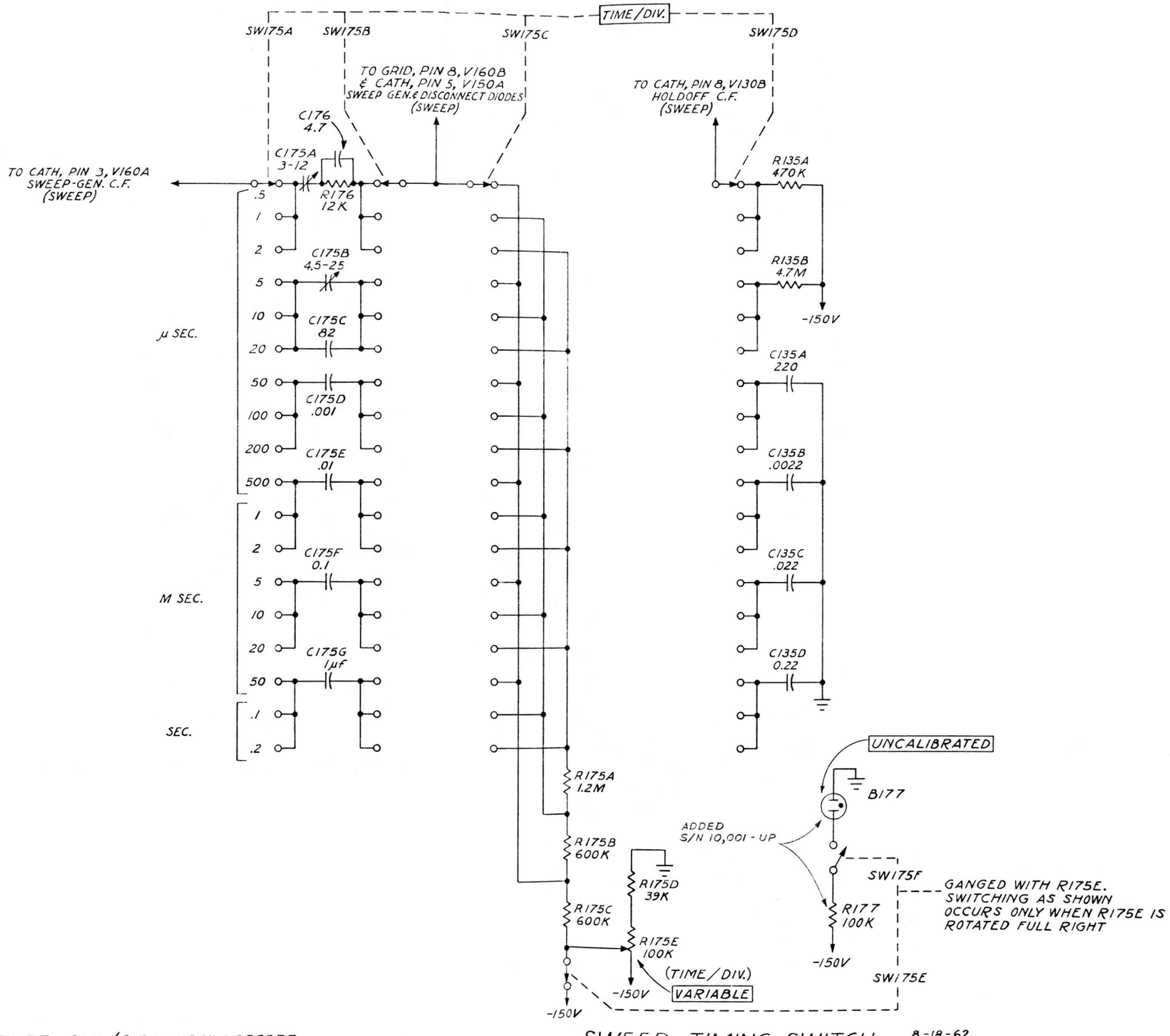

TYPE 310/310A OSCILLOSCOPE

SWEEP-TIMING SWITCH

8-18-62
KF

AA1

CONDITIONS OF SCOPE UNDER TEST

VOLTAGE READINGS

UPPER READINGS - HORIZONTAL POSITION CONTROL CCW
LOWER READINGS - HORIZONTAL POSITION CONTROL CW
SWEEP STABILITY CONTROL CCW

WAVEFORMS

SWEEP TIME - 100 μSEC / CM
SWITCHES AS SHOWN
CALIBRATOR WAVEFORM BEING DISPLAYED

310A HOR. AMP.

A

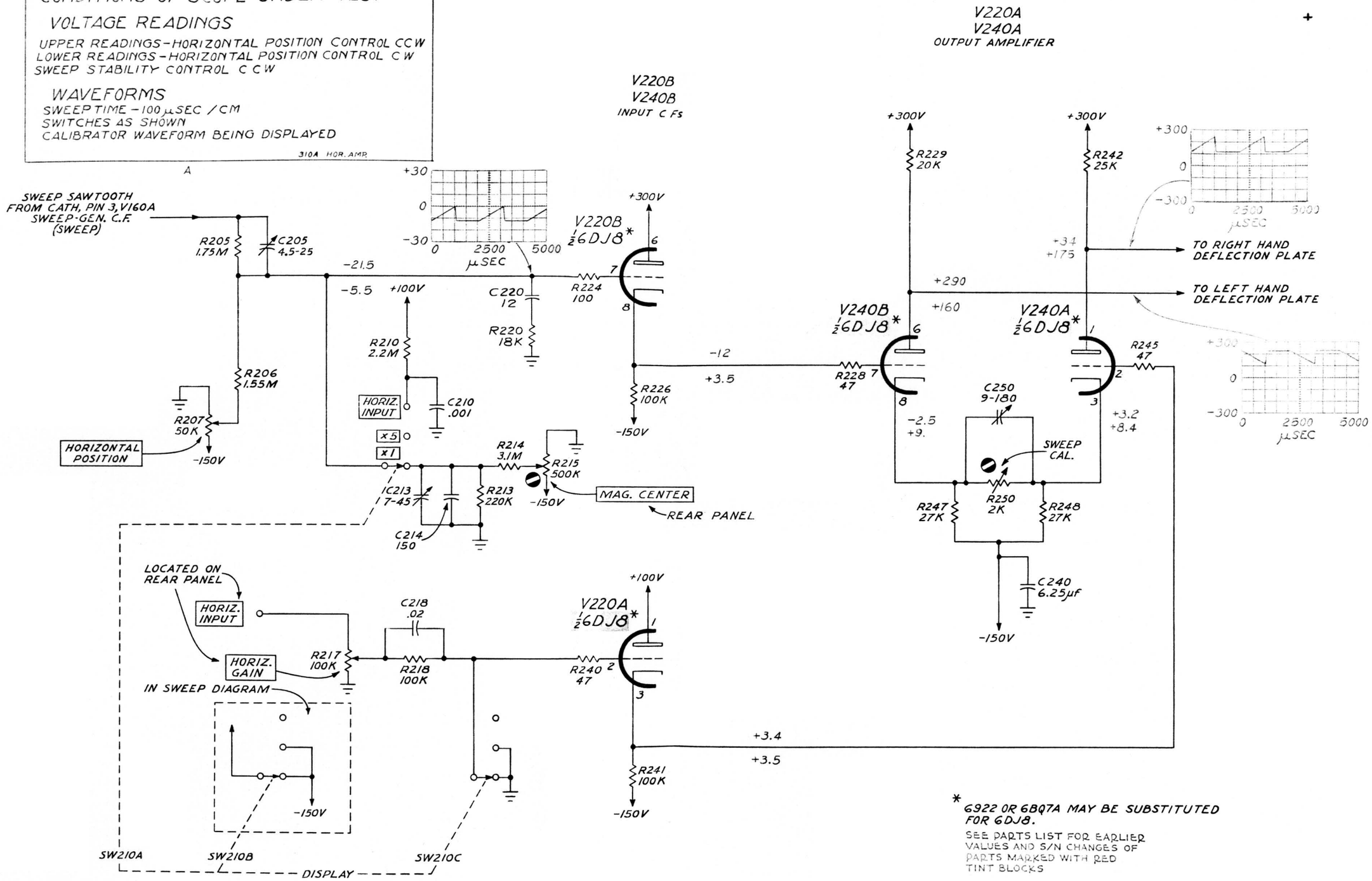

* 6922 OR 6BQ7A MAY BE SUBSTITUTED FOR 6DJ8.

SEE PARTS LIST FOR EARLIER VALUES AND S/N CHANGES OF PARTS MARKED WITH RED TINT BLOCKS

TYPE 310/310A OSCILLOSCOPE

AA2

HORIZONTAL AMPLIFIER

8-18-62
KF

CIRCUIT NUMBERS 201 THRU 249

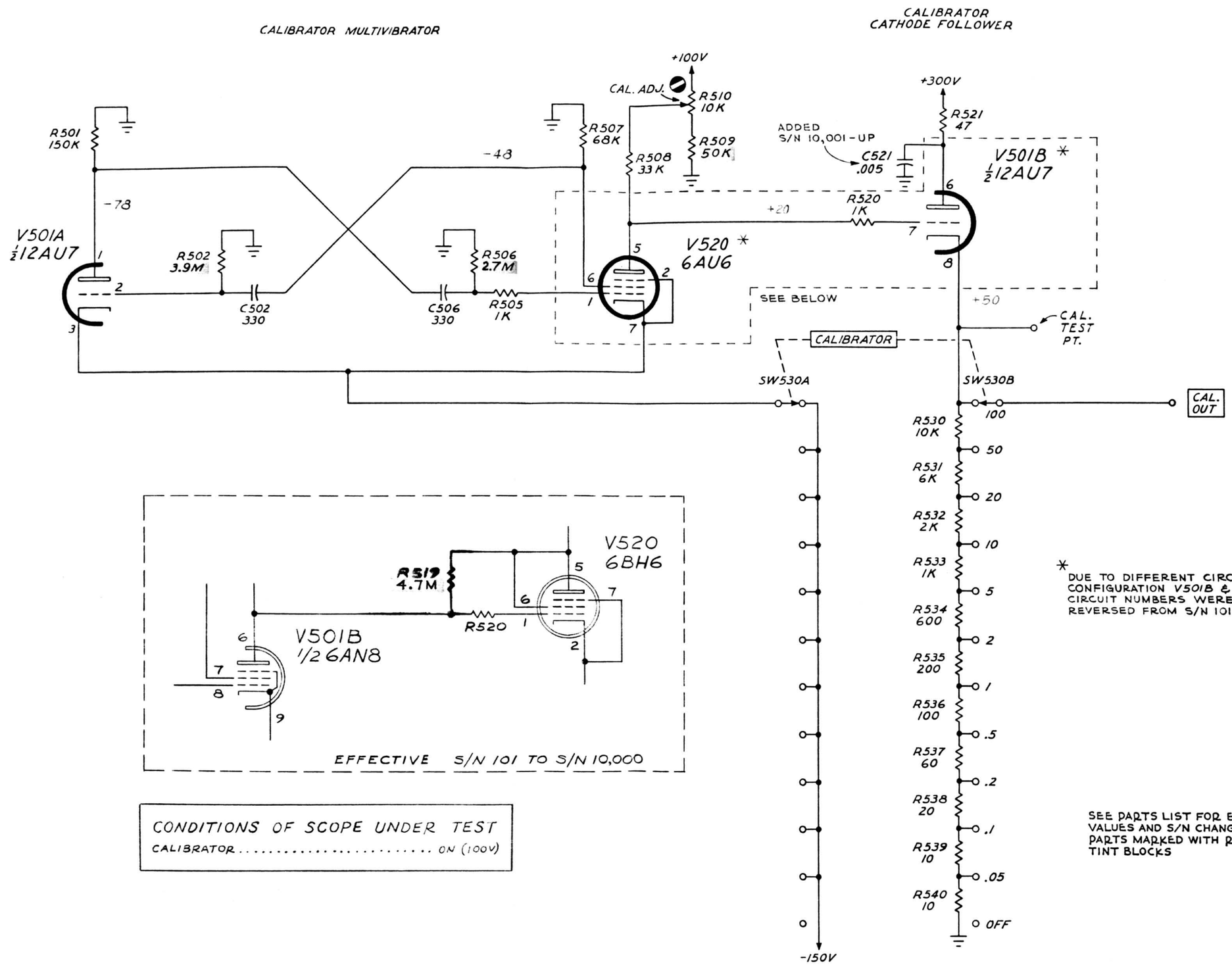

* DUE TO DIFFERENT CIRCUIT CONFIGURATION V501B & V520 CIRCUIT NUMBERS WERE REVERSED FROM S/N 101-10,000.

SEE PARTS LIST FOR EARLIER VALUES AND S/N CHANGES OF PARTS MARKED WITH RED TINT BLOCKS

TYPE 310/310 A OSCILLOSCOPE

AA2

CALIBRATOR

8-19-62 KF

CIRCUIT NUMBERS 500 THRU 549

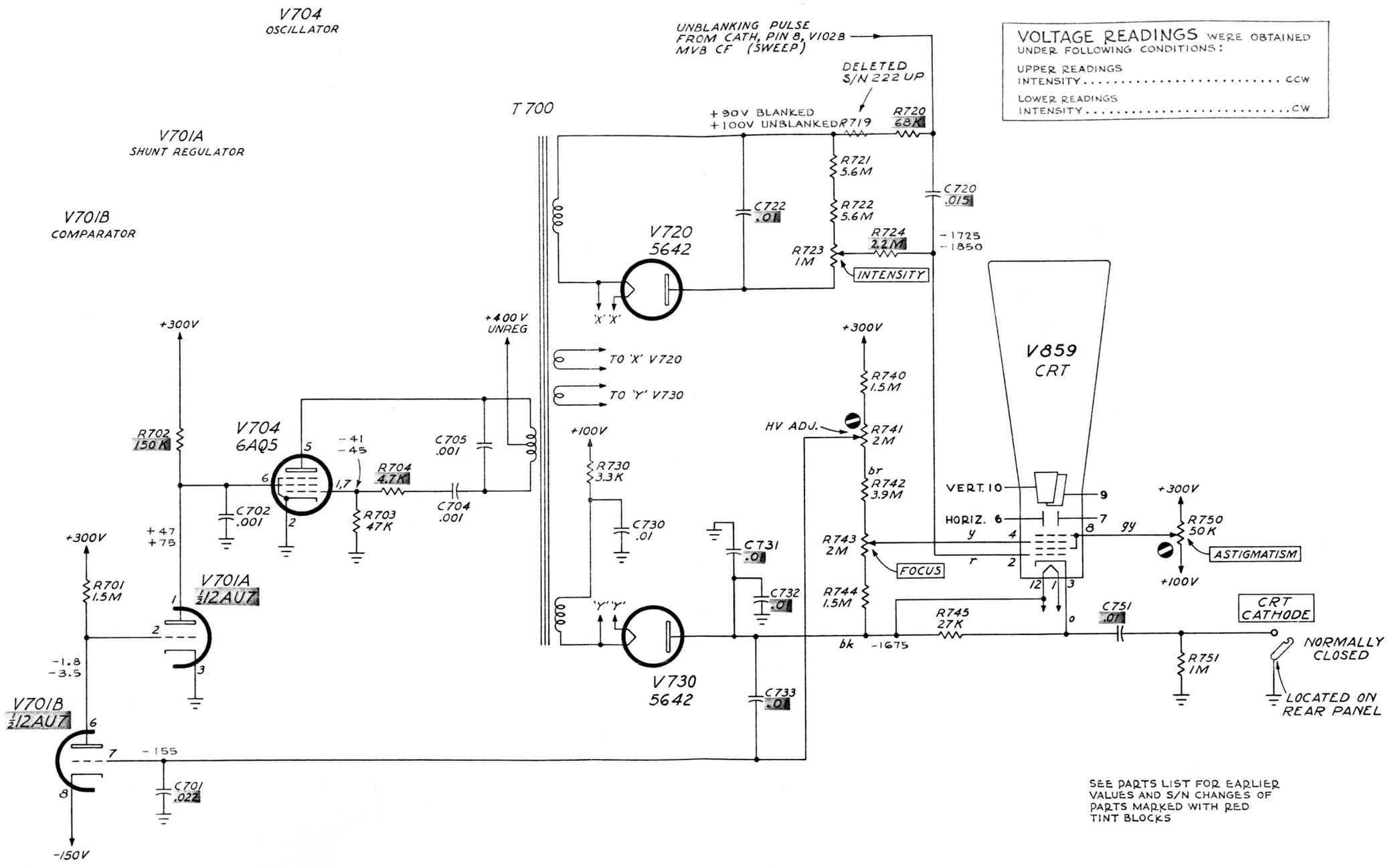

VOLTAGE READINGS WERE OBTAINED UNDER FOLLOWING CONDITIONS:

UPPER READINGS
INTENSITY ..... CCW

LOWER READINGS
INTENSITY ..... CW

SEE PARTS LIST FOR EARLIER VALUES AND S/N CHANGES OF PARTS MARKED WITH RED TINT BLOCKS

TYPE 310/310A OSCILLOSCOPE

AB2

CRT CIRCUIT

CIRCUIT NUMBERS 700 THRU 760

9-13-62
KF

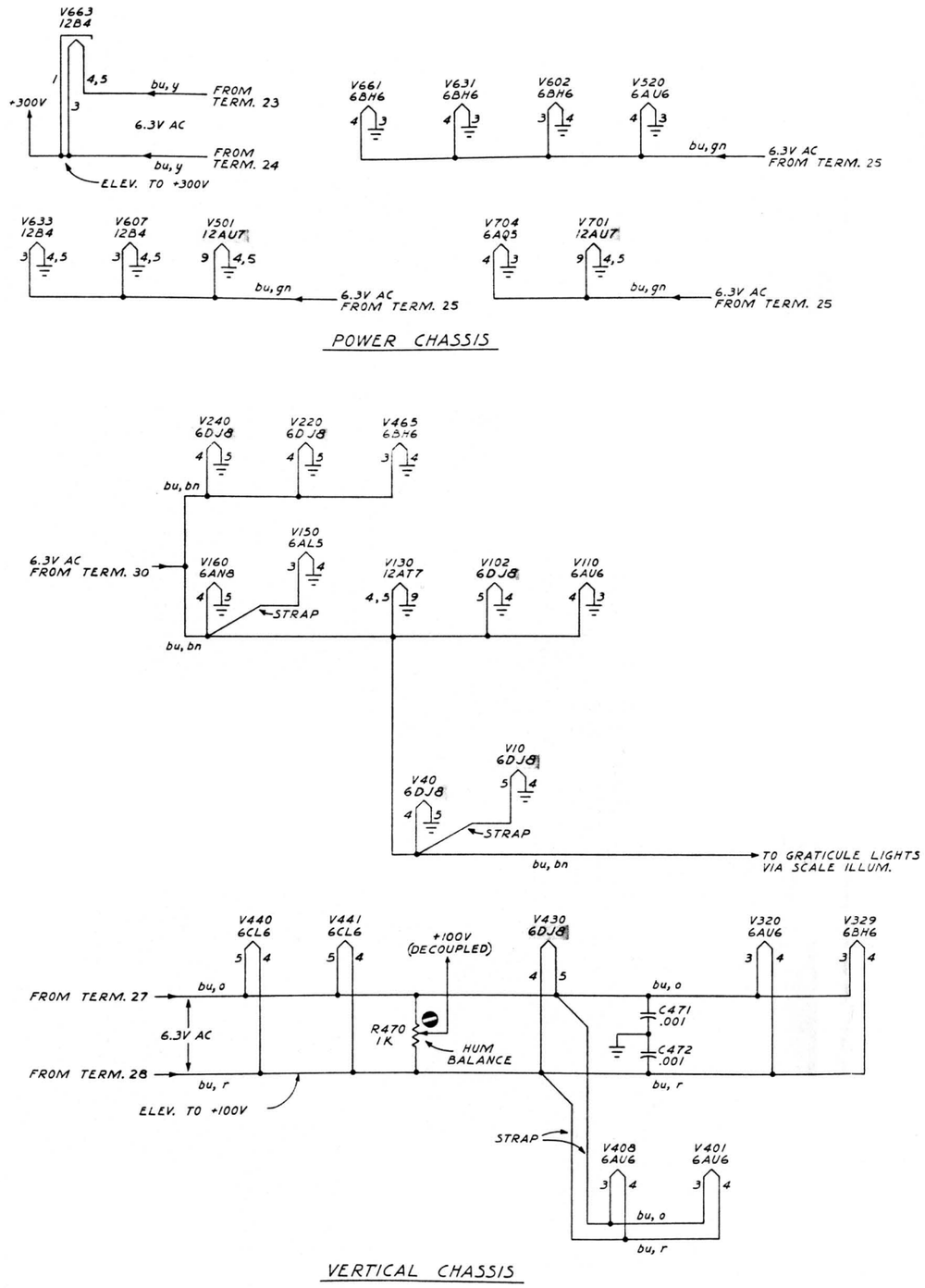

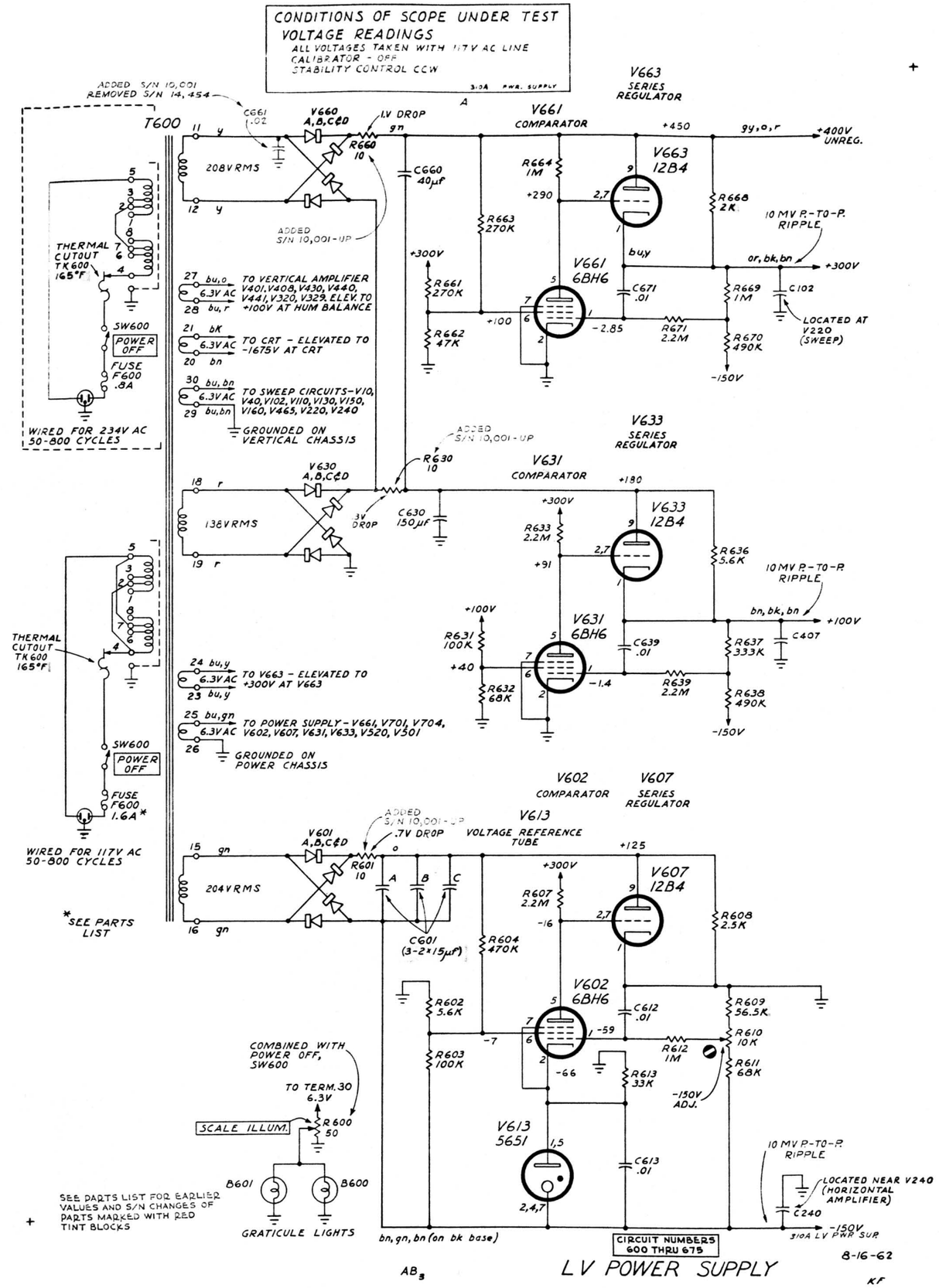

TYPE 31C/310A OSCILLOSCOPE

HEATER WIRING DIAGRAM

KF
8-16-62

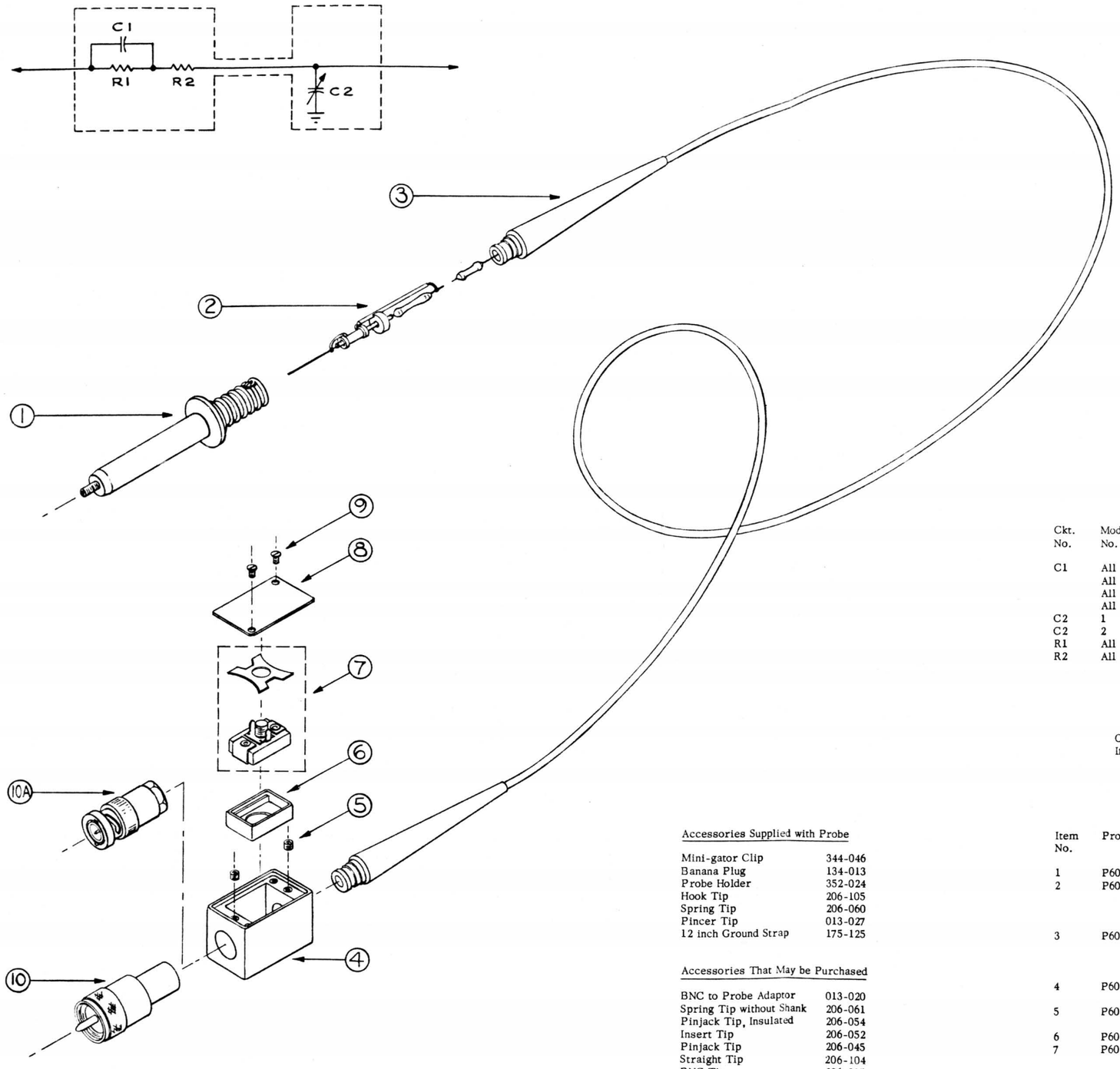

PROBES THIS SHEET COVERS

P6017

43 inches	Tektronix Part No.	010-038
6 ft.		010-056
9 ft.		010-057
12 ft.		010-058

P6022

43 inches	Tektronix Part No.	010-064
6 ft.		010-066
9 ft.		010-067
12 ft.		010-068

TABLE I ELECTRICAL PARTS

Ckt. No.	Model No.	Cable Length	Value	Description	Tektronix Part No.
C1	All	43 inches	11μμf	Cer. Fixed 500v +or- 5%	281-576
	All	6 ft.	14μμf		281-577
	All	9 ft.	18μμf		281-578
	All	12 ft.	21μμf		281-579
C2	1	All Lengths	8-50μμf	Cer. Var. 500v	281-013
C2	2	All Lengths	5-80μμf	Mica Var. 500v	281-062
R1	All	All Lengths	9 meg	1/2 w Fixed Prec. 2%	309-232
R2	All	All Lengths		Selected for proper cable termination. Furnished with cable.	

NOTE

On the underside of the lid for the Compensation Box is the Model Number. If the probe shows no number it will be Model Number One.

TABLE II MECHANICAL PARTS

Item No.	Probe Type	Model No.	Cable Length	Part Title	Tektronix Part No.
1	P6017/P6022	All	All Lengths	Probe Body	204-054
2	P6017/P6022	All	43 inches	Attenuation Assembly	011-038
			6 ft.		011-037
			9 ft.		011-039
			12 ft.		011-040
3	P6017/P6022	All	43 inches	Cable Assembly	175-143
			6 ft.		175-185
			9 ft.		175-186
			12 ft.		175-187
4	P6017/P6022	1	All Lengths	Compensator Box	202-051
		2			202-068
5	P6017/P6022	All	All Lengths	Allen Set Screws 4-40 x 3/32	213-075
6	P6017/P6022	2 only	All Lengths	Positioning Insulator	200-098
7	P6017/P6022	1	All Lengths	Compensating Capacitor	281-013
		2		Compensating Capacitor and Spring Clip Assembly	281-059
8	P6017/P6022	All	All Lengths	Plate Cover	200-248
9	P6017/P6022	All	All Lengths	Thread Cutting Screw 4-40 x 1/4	213-035
10A	P6017	All	All Lengths	Connector, UHF	131-058
10	P6022	All	All Lengths	Connector, BNC	131-186

MRH

Accessories Supplied with Probe

Mini-gator Clip	344-046
Banana Plug	134-013
Probe Holder	352-024
Hook Tip	206-105
Spring Tip	206-060
Pincer Tip	013-027
12 inch Ground Strap	175-125

Accessories That May be Purchased

BNC to Probe Adaptor	013-020
Spring Tip without Shank	206-061
Pinjack Tip, Insulated	206-054
Insert Tip	206-052
Pinjack Tip	206-045
Straight Tip	206-104
BNC Tip	206-015
5 inch Ground Strap	175-124
18 inch Ground Strap	175-184