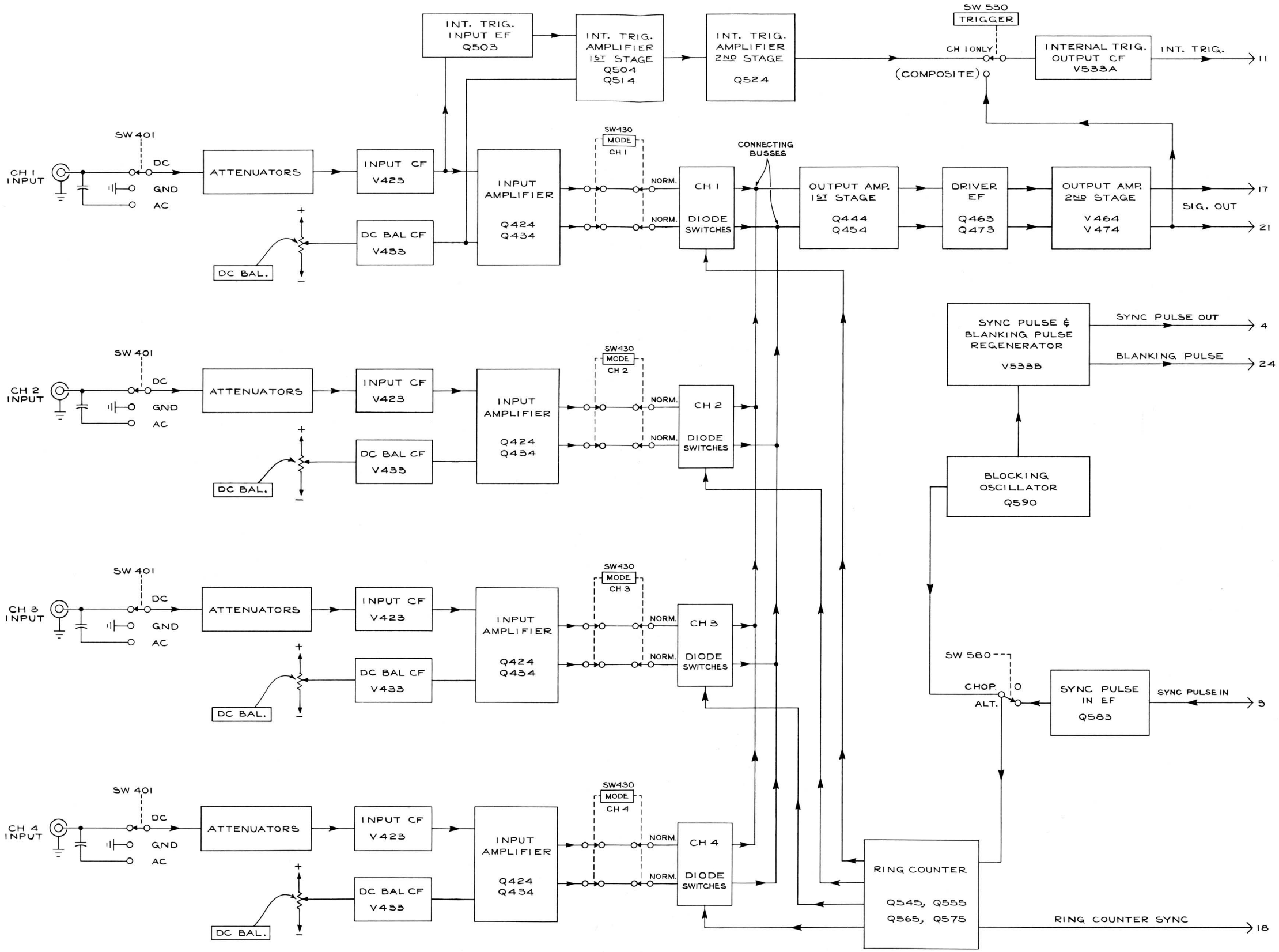

TYPE 3A74 PLUG-IN

A

PLM 863

BLOCK DIAGRAM

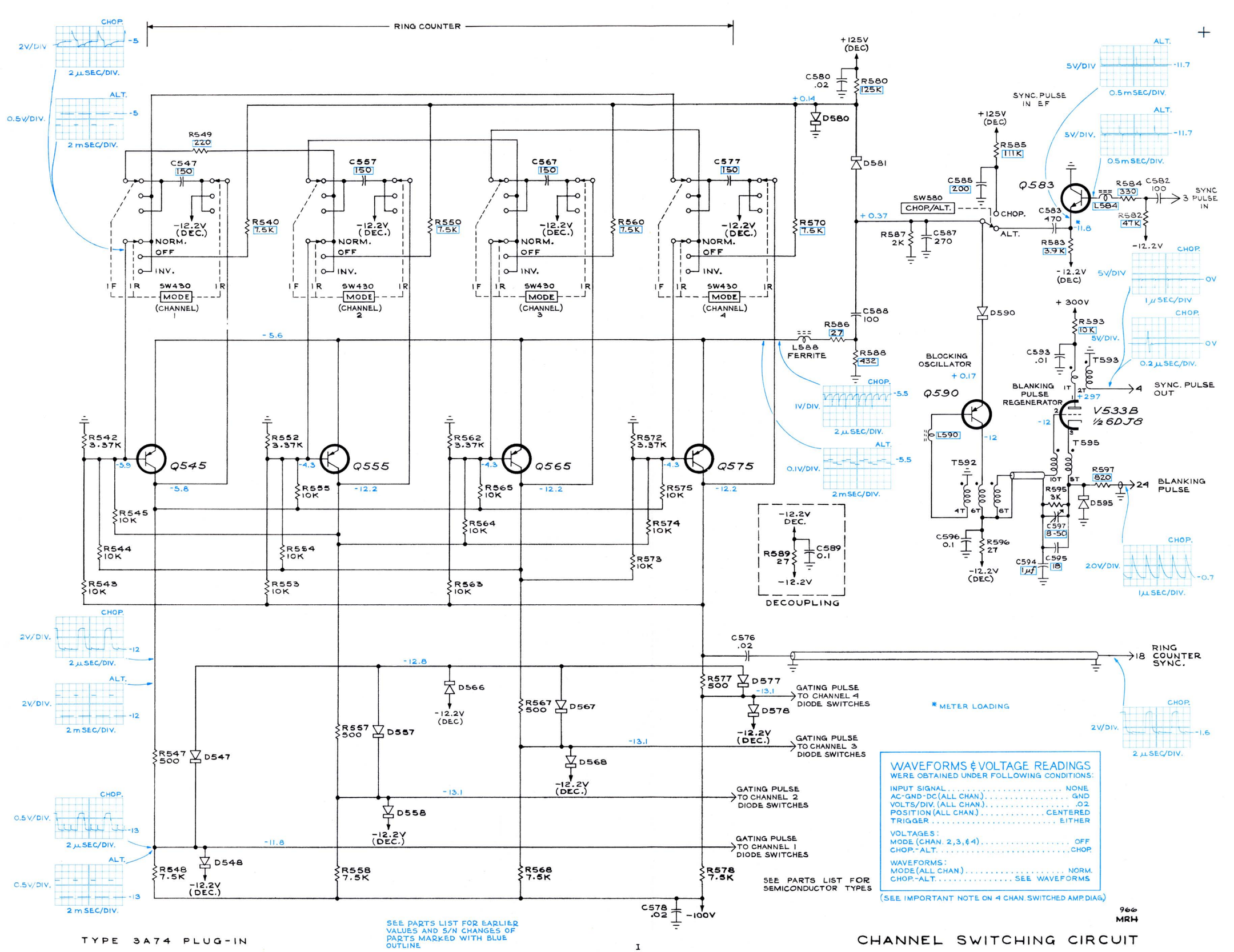

SEE PARTS LIST FOR EARLIER VALUES AND S/N CHANGES OF PARTS MARKED WITH BLUE OUTLINE

TYPE 3A74 PLUG-IN

CHANNEL SWITCHING CIRCUIT

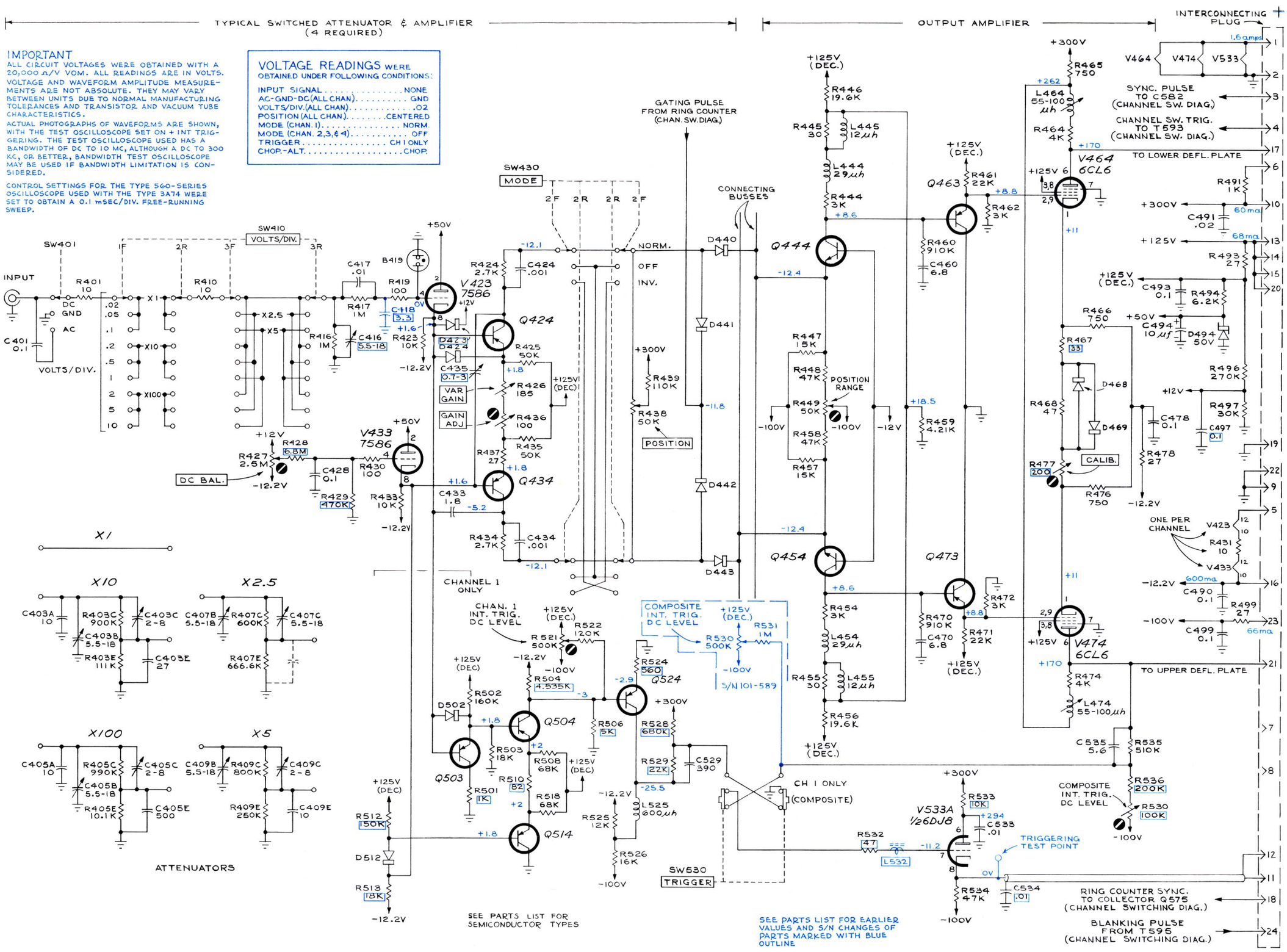

TYPE 3A74 PLUG-IN

G2

4 CHANNEL SWITCHED AMPLIFIER