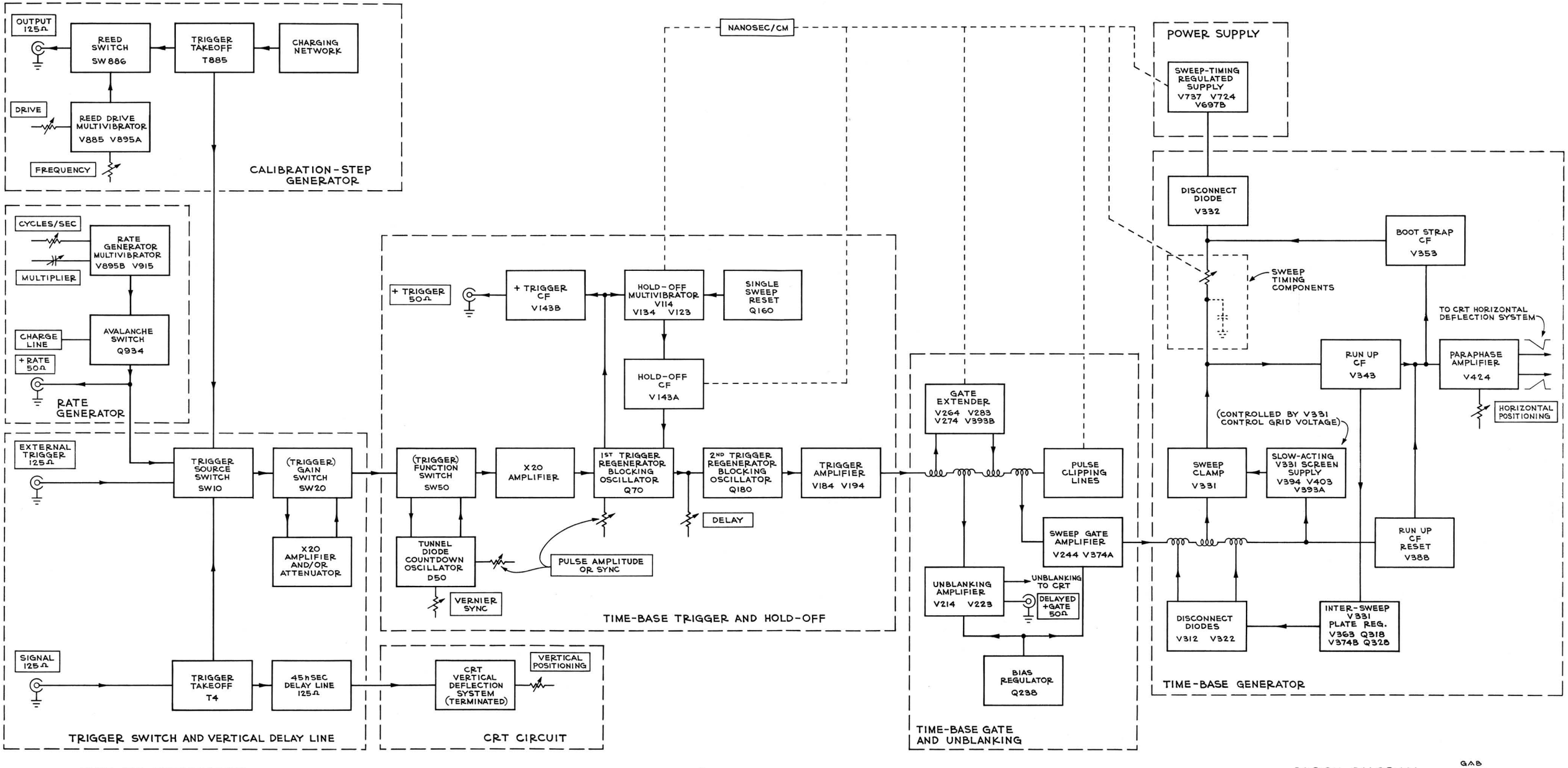

TYPE 519 OSCILLOSCOPE

A

BLOCK DIAGRAM

GAB
2-3-61

RATE GEN. PULSE (RATE GEN. DIAG.)
125Ω
R8 22
1F
SW10 TRIGGER SOURCE
1R 2F&R 2R 2R 5F&R 6F&R 3F 4R
(TRIGGER) GAIN SW20
1F 2R 3R
CALIBRATION-STEP PULSE (CAL.-STEP GEN. DIAG.)
INTERNAL CONNECTOR LOCATED NEAR FRONT PANEL
R6 68
R7 100
R9 22
T20
R21 82
R23 82
R22 51
X.2
TRIGGER SIGNAL TO FUNCTION SWITCH (TIME-BASE TRIG. DIAG.)
RATE GEN.
CAL.
EXT.
INT.
NORMAL
C29 0.1
-26.5V
X5
X20
R26 75
R28 75
R27 68
A=20
R15 10
EXTERNAL TRIGGER 125Ω
R10 240
R11 240
R13 240
R14 240
(VERTICAL) SIGNAL 125Ω
TRIGGER TAKEOFF TRANSFORMER
T4
R16 240
R17 240
R18 240
R19 240
125Ω COAX DELAY LINE (45 nSEC DELAY)
INTERNAL CONNECTOR TO VERTICAL DEFLECTION PLATE (CRT CIRCUIT DIAG.)

VOLTAGES OBTAINED WITH 20,000 OHMS PER VOLT VOLTMETER.

VOLTAGE READINGS OBTAINED UNDER THE FOLLOWING CONDITIONS:
LINE VOLTAGE . . . . . 117 VOLTS
GAIN X20

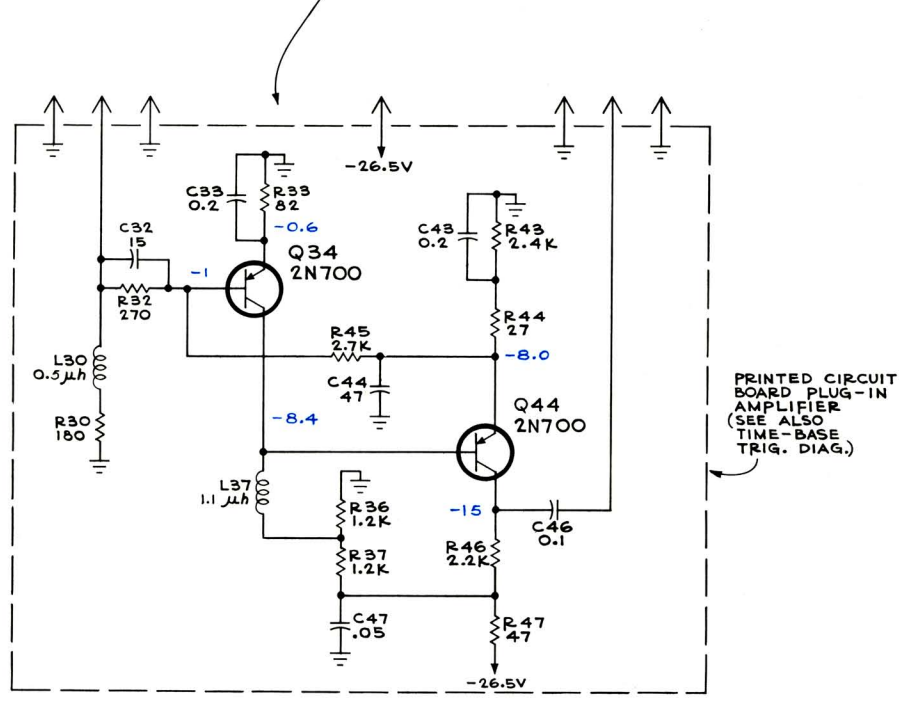

PRINTED CIRCUIT BOARD PLUG-IN AMPLIFIER (SEE ALSO TIME-BASE TRIG. DIAG.)

GAB 1263

TYPE 519 OSCILLOSCOPE

A5

519

TRIG. SW. & VERT. DEL. LINE

TRIGGER SWITCH & VERTICAL DELAY LINE

CIRCUIT NUMBERS 4 THRU 47

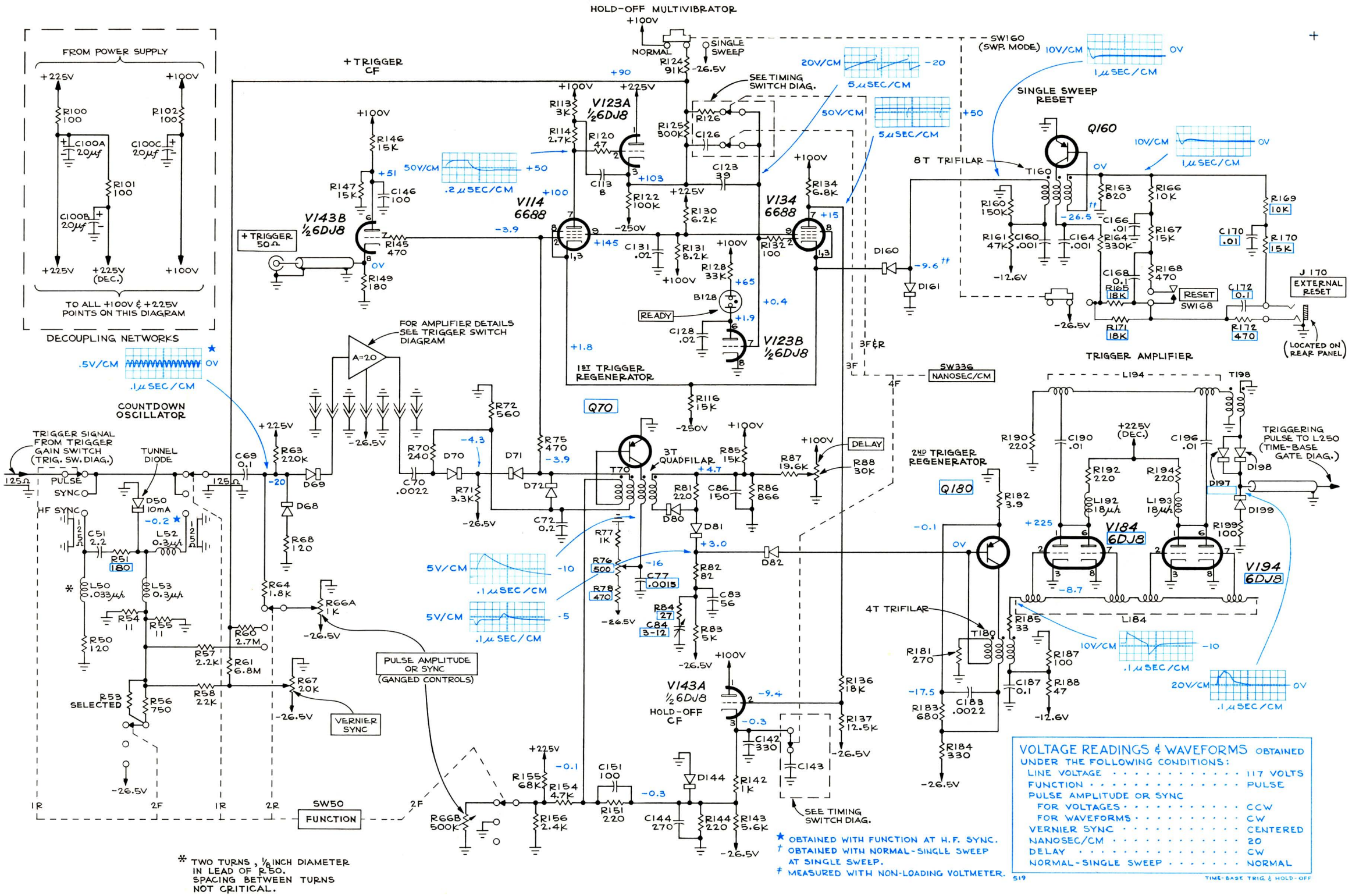

* TWO TURNS, ⅛ INCH DIAMETER IN LEAD OF R50. SPACING BETWEEN TURNS NOT CRITICAL.

SEE PARTS LIST FOR SEMICONDUCTOR TYPES

SEE PARTS LIST FOR EARLIER VALUES AND S/N CHANGES OF PARTS MARKED WITH BLUE OUTLINE

ML 866

TYPE 519 OSCILLOSCOPE

G1

TIME-BASE TRIGGER & HOLD-OFF

CIRCUIT NUMBERS 50 THRU 199

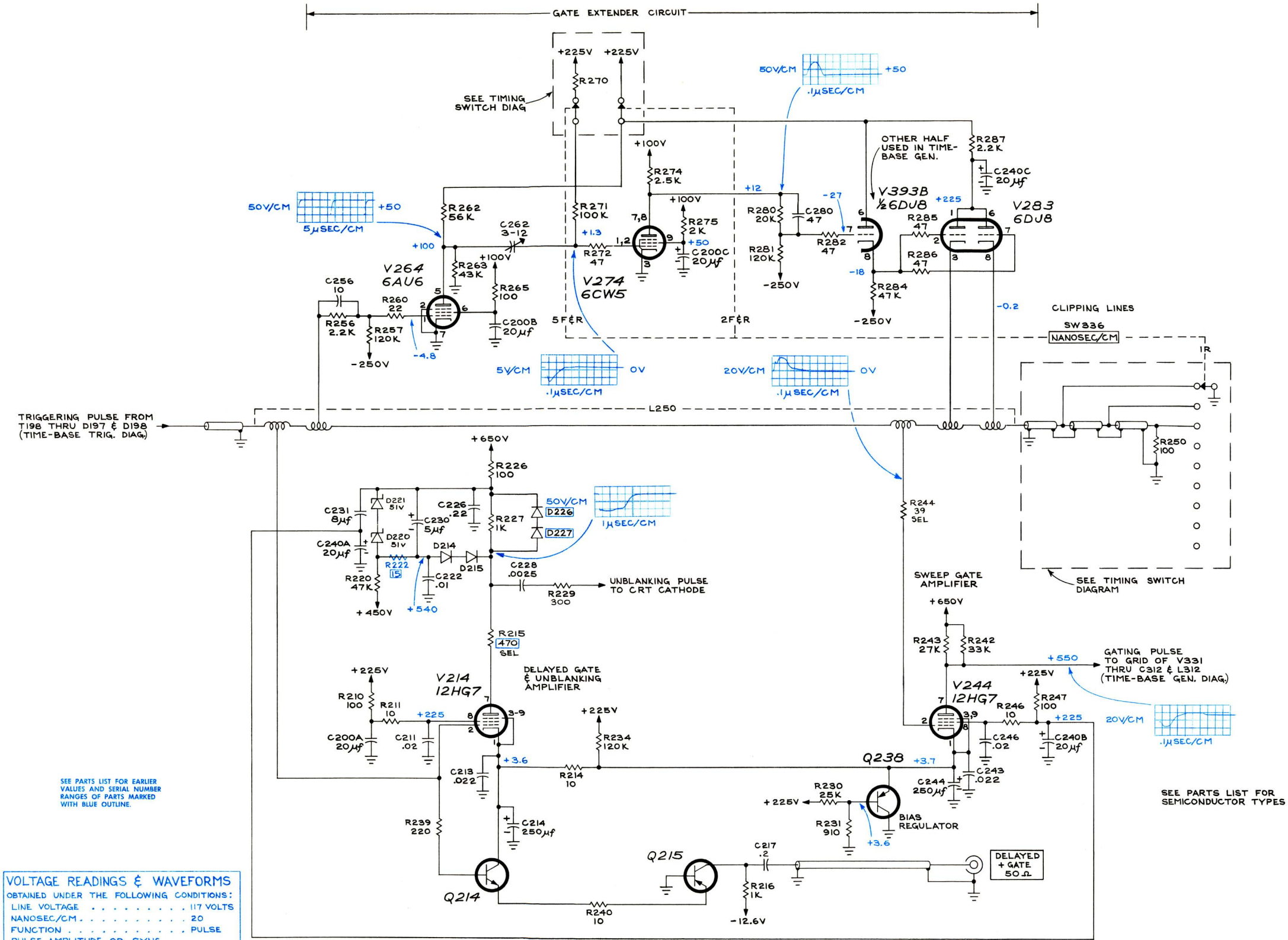

SEE PARTS LIST FOR EARLIER VALUES AND SERIAL NUMBER RANGES OF PARTS MARKED WITH BLUE OUTLINE.

SEE PARTS LIST FOR SEMICONDUCTOR TYPES

VOLTAGE READINGS & WAVEFORMS

OBTAINED UNDER THE FOLLOWING CONDITIONS:

LINE VOLTAGE	117 VOLTS
NANOSEC/CM	20
FUNCTION	PULSE
PULSE AMPLITUDE OR SYNC	
FOR VOLTAGES	CCW
FOR WAVEFORMS	CW
NORMAL-SINGLE SWEEP	NORMAL

VOLTAGES MEASURED WITH 20,000 OHMS-PER-VOLT VOLTMETER.
WAVEFORMS OBTAINED WITH 30 MC OSCILLOSCOPE.

TYPE 519 OSCILLOSCOPE

1066

TIME-BASE GATE & UNBLANKING
S/N 743 & UP

CIRCUIT NUMBERS 200 THRU 287 ALSO V393B

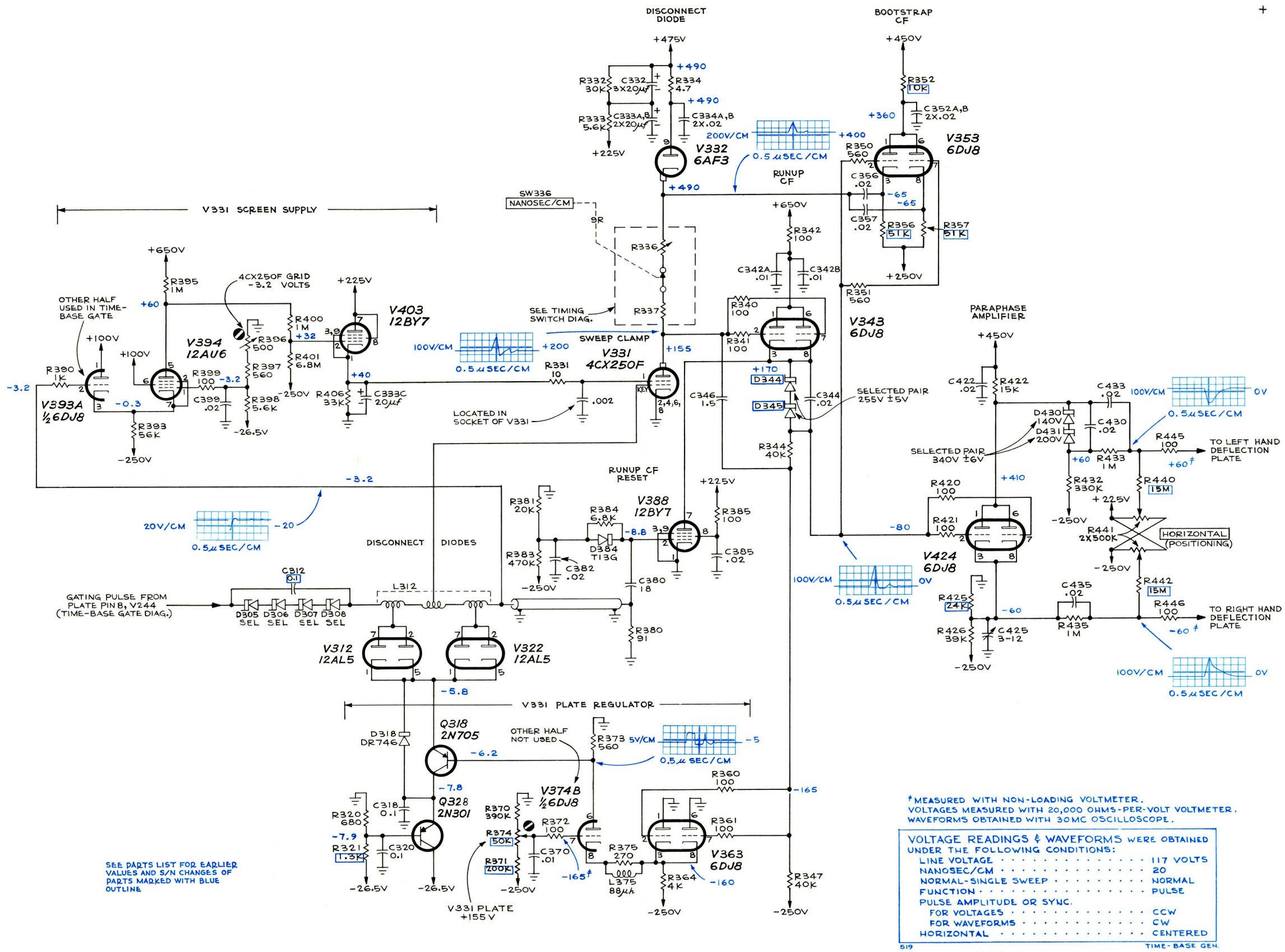

‡MEASURED WITH NON-LOADING VOLTMETER.
VOLTAGES MEASURED WITH 20,000 OHMS-PER-VOLT VOLTMETER.
WAVEFORMS OBTAINED WITH 30MC OSCILLOSCOPE.

VOLTAGE READINGS & WAVEFORMS WERE OBTAINED UNDER THE FOLLOWING CONDITIONS:

LINE VOLTAGE	117 VOLTS
NANOSEC/CM	20
NORMAL-SINGLE SWEEP	NORMAL
FUNCTION	PULSE
PULSE AMPLITUDE OR SYNC.	
FOR VOLTAGES	CCW
FOR WAVEFORMS	CW
HORIZONTAL	CENTERED

519 TIME-BASE GEN.

SEE PARTS LIST FOR EARLIER VALUES AND S/N CHANGES OF PARTS MARKED WITH BLUE OUTLINE

1067

TIME-BASE GENERATOR

CIRCUIT NUMBERS 305 THRU 446

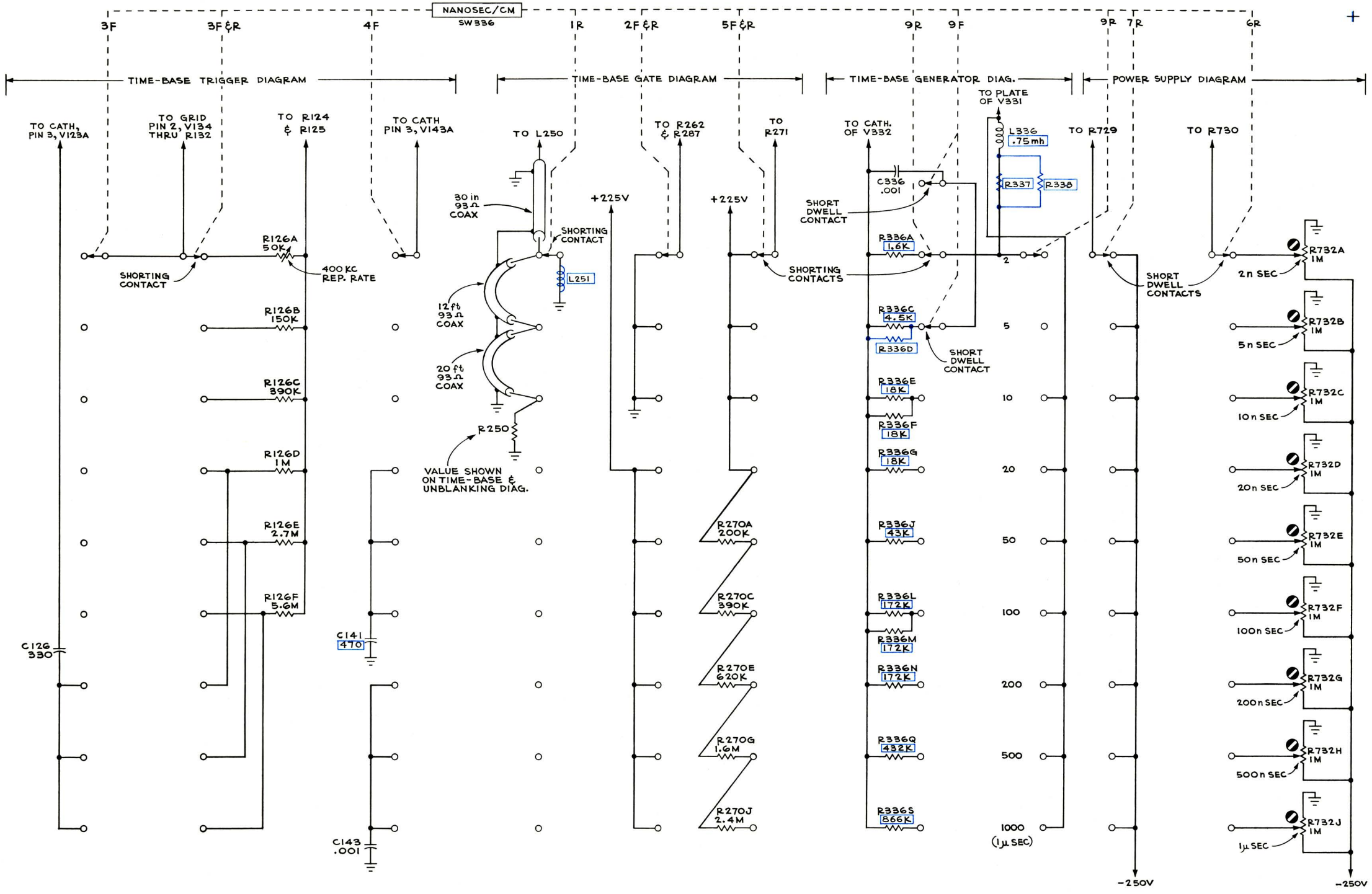

SEE PARTS LIST FOR EARLIER VALUES AND S/N CHANGES OF PARTS MARKED WITH BLUE OUTLINE

TYPE 519 OSCILLOSCOPE

C1

TIMING SWITCH

G&B
1263

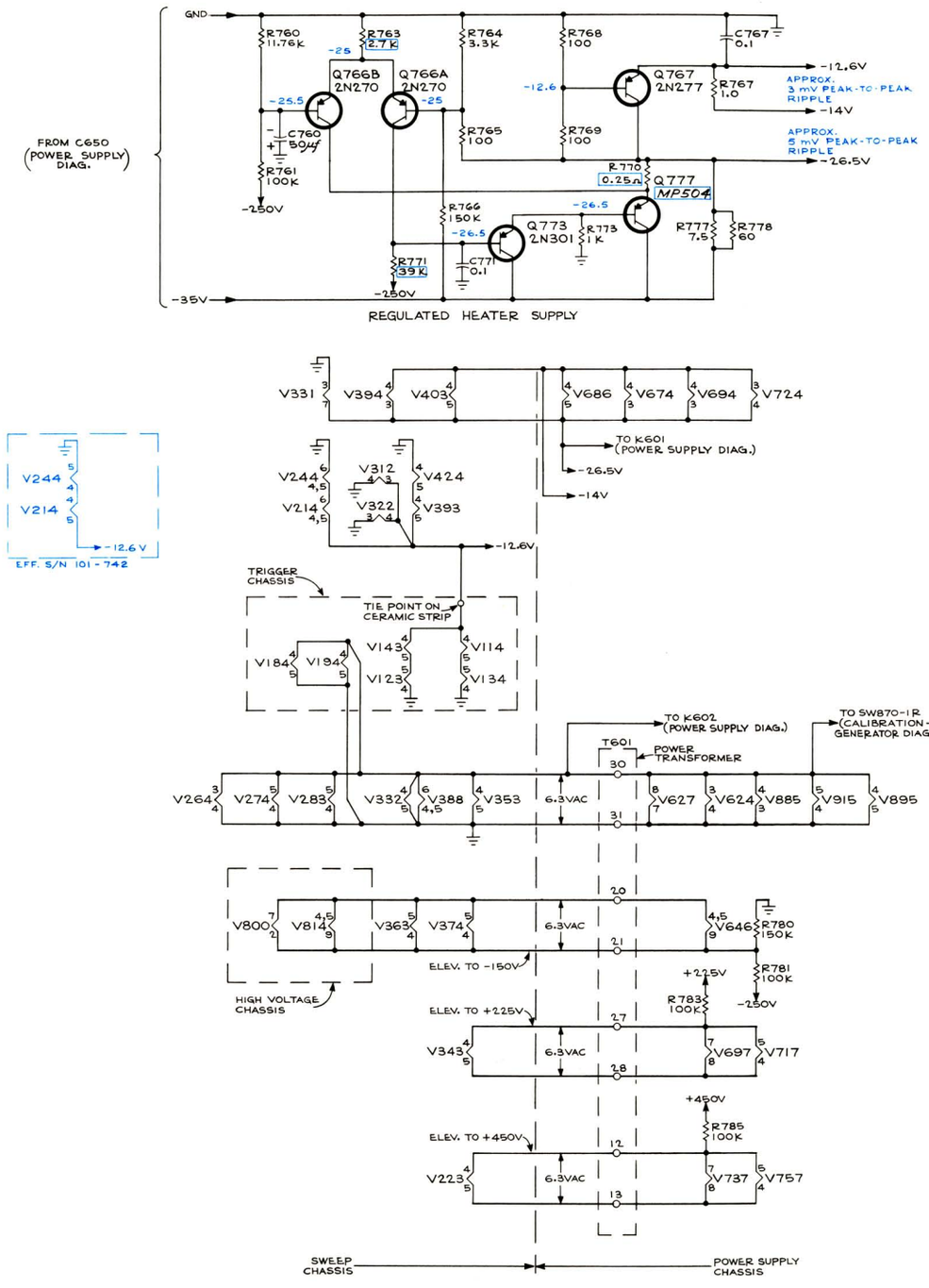

TYPE 519 OSCILLOSCOPE

REGULATED HEATER SUPPLY & HEATER WIRING DIAGRAM

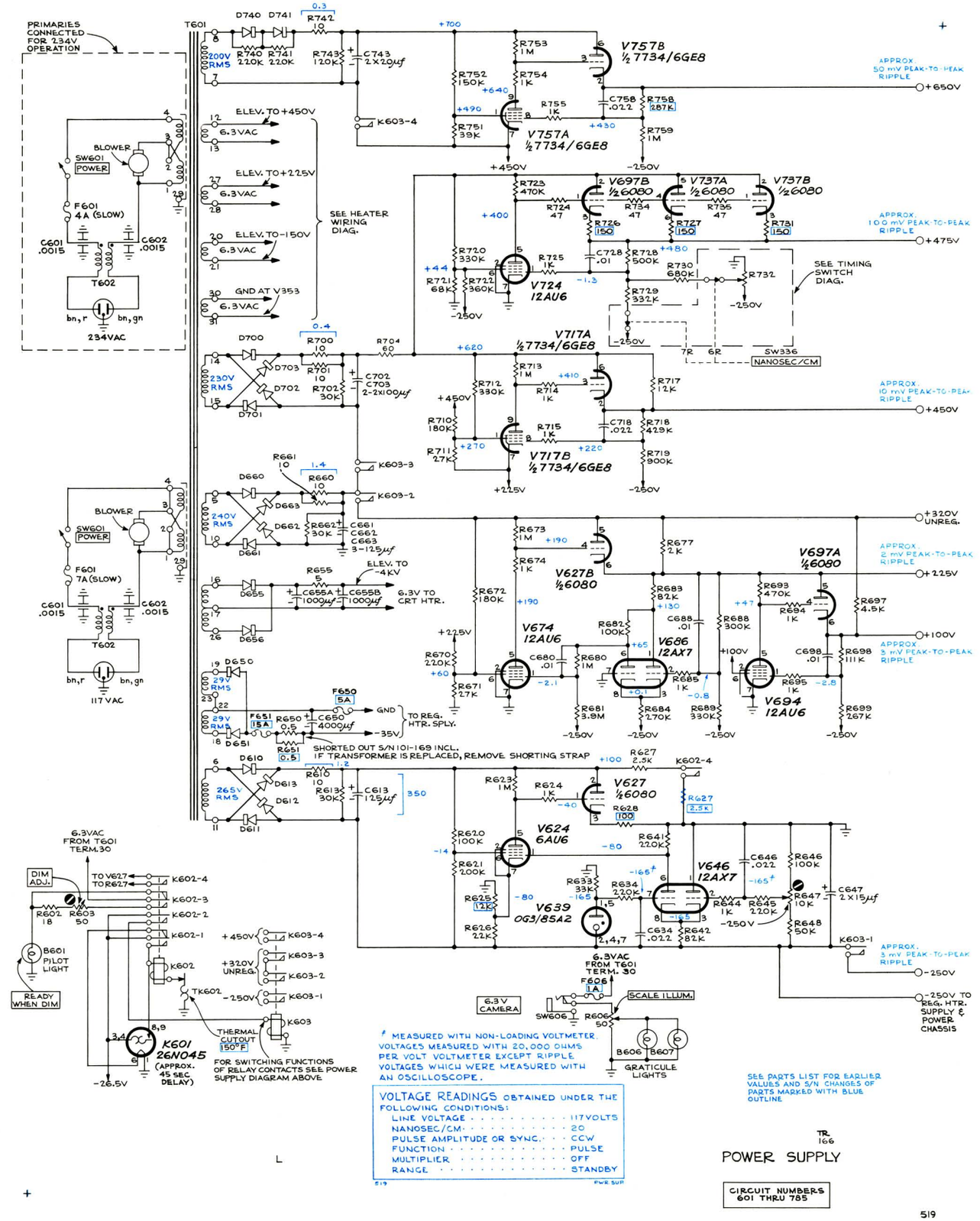

* MEASURED WITH NON-LOADING VOLTMETER. VOLTAGES MEASURED WITH 20,000 OHMS PER VOLT VOLTMETER EXCEPT RIPPLE VOLTAGES WHICH WERE MEASURED WITH AN OSCILLOSCOPE.

VOLTAGE READINGS OBTAINED UNDER THE FOLLOWING CONDITIONS:

LINE VOLTAGE	117VOLTS
NANOSEC/CM	20
PULSE AMPLITUDE OR SYNC.	CCW
FUNCTION	PULSE
MULTIPLIER	OFF
RANGE	STANDBY

519 PWR SUP

SEE PARTS LIST FOR EARLIER VALUES AND S/N CHANGES OF PARTS MARKED WITH BLUE OUTLINE

TR 166

POWER SUPPLY

CIRCUIT NUMBERS 601 THRU 785

HV RECTIFIERS

OSCILLATOR

200V/CM +200

50 μSEC/CM

+320V (UNREG.)

F801 .25A

R801 390

C801 8μf

T801

+450V

+290

R803 100K

R804 100K

V800 6AU5

C808 .001

C807 .01

-57

C803 .001

R806 100K

R807 1.5K

C812 500

V802 1X2B

V812 1X2B

V822 1X2B

V832 5642

R834 470K

R835 470K

+20 KV

C835 500

V859 T519

BEAM ROTATING COIL

R860 2K

-26.5V

AXIS ROTATION

-12.6V

HELICAL DAG

C802 500

C822 500

C832 .0068

C833 .0068

GROUNDED DEFL. PLATE

+225V

GEOMETRY

R861 250K

INTERPLATE ISOLATION SHIELD

BYPASSED DEFL. PLATE

TERMINATION

DISTRIBUTED DEFL. PLATE

SIGNAL IN

+225V -250V

VERTICAL (POSITIONING)

R865 250K

R867 120K

R869 10K

R868 18K

C849 .005

R848 1K

-250V

+225V

ASTIGMATISM

R863 1K

R864 250K

-250V

R862 1K

R866 1K

R857 270K

C862 .001

C857 .001

B858

R858 1M

6.3VAC

SEE POWER SUPPLY DIAGRAM

C858 .001

R859 22K

UNBLANKING PULSE FROM R229 & C229 (TIME-BASE GATE & UNBLANKING DIAG.)

TO V802

TO V812

TO V822

TO V832

R850 2.2M

R851 2.2M

R852 1.5M

R849 15M

R853 5M

FOCUS

R854 1M

B853

B854

B855

B856

B857

R855 1M

MAX. INTENS.

R856 1M

INTENSITY

-4 KV

ERROR SIGNAL AMPLIFIERS

+115

V814A ½12AU7

-8.6

+450V

R815 1M

V814B ½12AU7

-265

-250V

+450V

C841 .01

R840 1.8M

HIGH VOLTAGE

R841 1M

R842 2.7M

R843 2.7M

R844 2.2M

R845 2.2M

R846 2.2M

R847 2.2M

C842 .0068

-4100

VOLTAGES MEASURED WITH 20,000 OHMS PER VOLT VOLTMETER.

VOLTAGE READINGS & WAVEFORM
OBTAINED UNDER THE FOLLOWING CONDITIONS:

LINE VOLTAGE	117 VOLTS
INTENSITY	CCW
VERTICAL	CENTERED
FUNCTION	PULSE
PULSE AMPLITUDE OR SYNC.	CCW

SEE PARTS LIST FOR EARLIER VALUES AND S/N CHANGES OF PARTS MARKED WITH BLUE OUTLINE

TYPE 519 OSCILLOSCOPE

G1

467
TP-

CRT CIRCUIT

CIRCUIT NUMBERS 800 THRU 869

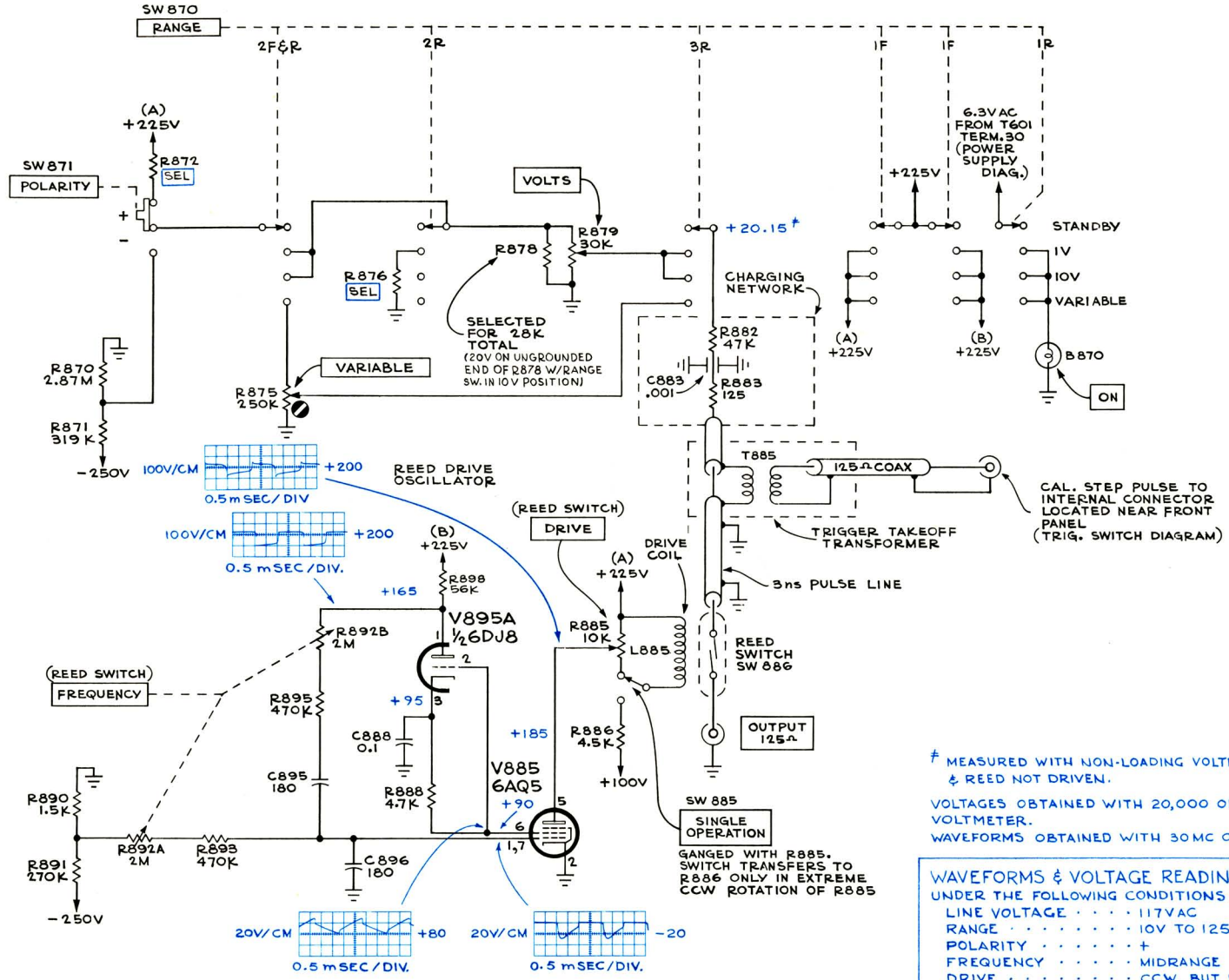

♯ MEASURED WITH NON-LOADING VOLTMETER & REED NOT DRIVEN.

VOLTAGES OBTAINED WITH 20,000 OHMS-PER-VOLT VOLTMETER.

WAVEFORMS OBTAINED WITH 30 MC OSCILLOSCOPE.

WAVEFORMS & VOLTAGE READINGS OBTAINED UNDER THE FOLLOWING CONDITIONS:

LINE VOLTAGE	117VAC
RANGE	10V TO 125Ω
POLARITY	+
FREQUENCY	MIDRANGE
DRIVE	CCW, BUT NOT SWITCHED TO SINGLE OPERATION.
VOLTS	10.0

519 CALIB.- STEP GEN.

TYPE 519 OSCILLOSCOPE

CALIBRATION - STEP GENERATOR

GAB
567

CIRCUIT NUMBERS
870 THRU 898

SEE PARTS LIST FOR EARLIER VALUES AND SERIAL NUMBER RANGES OF PARTS MARKED WITH BLUE OUTLINE.

RATE GENERATOR
MULTIVIBRATOR

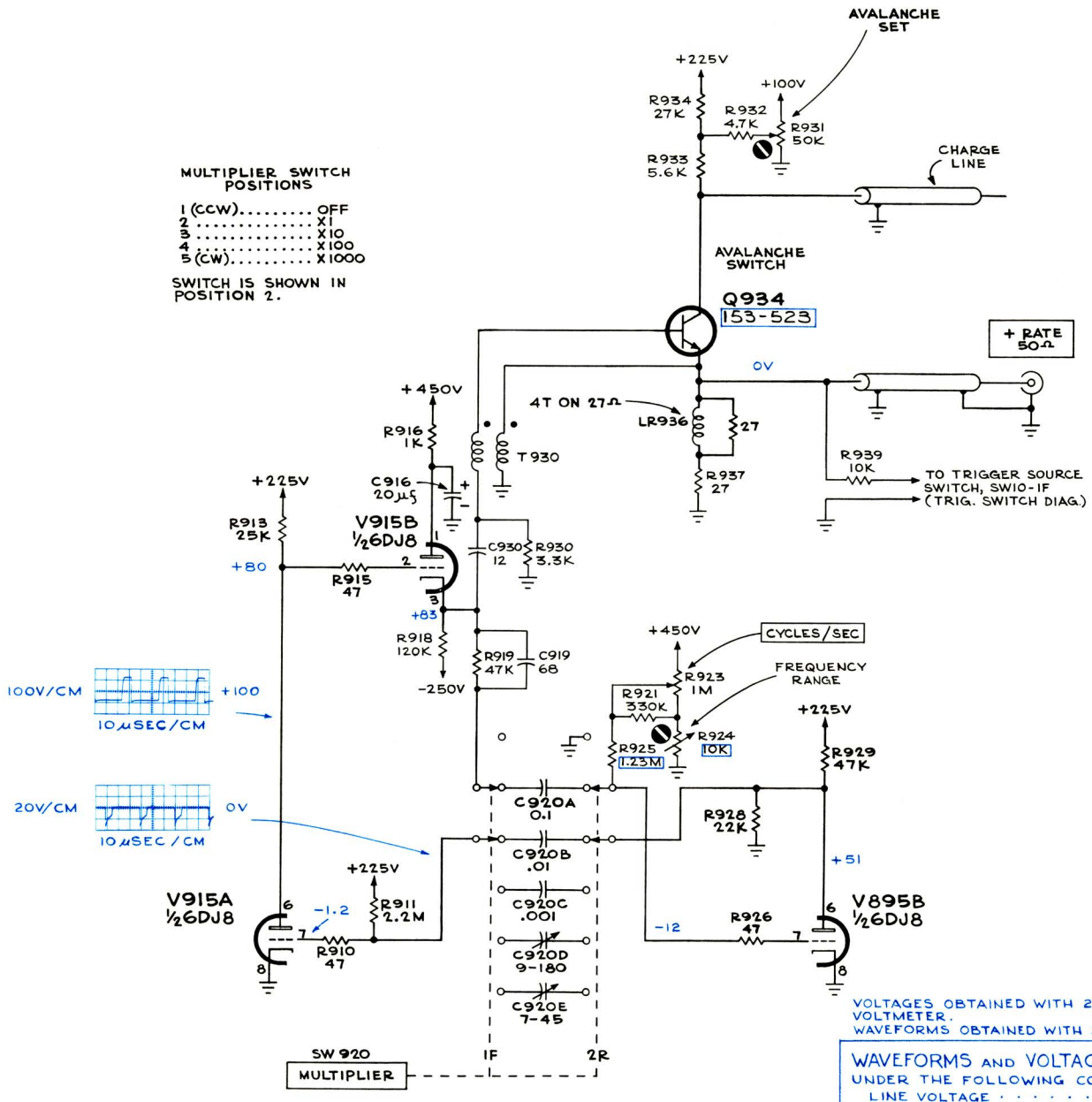

VOLTAGES OBTAINED WITH 20,000 OHMS-PER-VOLT VOLTMETER.
WAVEFORMS OBTAINED WITH 30 MC OSCILLOSCOPE.

WAVEFORMS AND VOLTAGE READINGS OBTAINED UNDER THE FOLLOWING CONDITIONS.

LINE VOLTAGE	117 VOLTS
MULTIPLIER	X1000
CYCLES/SEC	30

519 RATE GEN.

SEE PARTS LIST FOR EARLIER VALUES AND S/N CHANGES OF PARTS MARKED WITH BLUE OUTLINE

GAB
1264

TYPE 519 OSCILLOSCOPE

B1

RATE GENERATOR

S/N 482-UP

CIRCUIT NUMBERS 910 THRU 939 ALSO V895B